K34R6-8D

K34R6-8

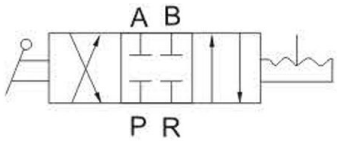

Product Specification

K	34	R6	–	8	D
Model	Series	Function		Pipe Size	Installation
K: Pneumatic Components	34: Three Position Four Way			8 : G1/4	L: Both Side Pipe D: Bottom Pipe Blank: Four Side Pipe

K34R6-08D
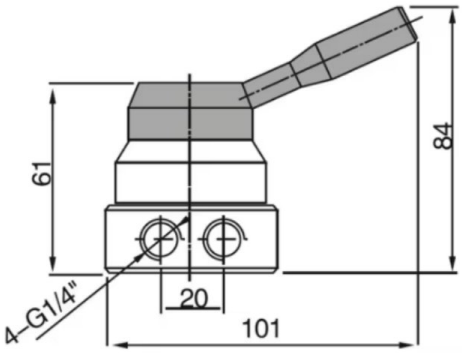
K34R6-08L