Applicable Cylinder Series

Applicable Cylinder Series 1

	Cylinder series	CDJP2		CDJ2	JCDM	CDM2-Z	CDM2	CDM3	CDG1-Z1	CDG1		CDG3		JMDB	MDB	MDB-X1184	MDB1	CDA2	CDA2-X1184	CDS1	CDS2	CDUJ	CDU		CDQS	JCDQ	CDQ2					CDQ2-XB14	RDQ		CDQM		CDQU
	Bore size	ø4	ø6, ø10, ø16	ø6, ø10, ø16	ø20 to ø40	ø20 to ø40	ø20 to ø40	ø20 to ø40	ø20 to ø63	ø80, ø100	ø20 to ø63	ø80, ø100	ø20 to ø63	ø80, ø100	ø32 to ø100	ø32 to ø125	ø40 to ø100	ø32 to ø125	ø40 to ø100	ø40 to ø100	ø125 to ø200	ø125 to ø160	ø6 to ø20	ø6 to ø32	ø12 to ø20	ø25	ø12 to ø100	ø12 to ø20	ø25	ø32 to ø100	ø125 to ø160	ø180 to ø200	ø16 to ø63	ø20, ø25	ø32 to ø50	ø12 to ø25	ø32 to ø100	ø20 to ø40
Solid state auto switches	D-H7																																				
	D-H7C																																				
	D-H7BA																																				
	D-H7NF																																				
	D-H7□W																																				
	D-G5/K5																																				
	D-G5BA																																				
	D-G59F																																				
	D-G5NT																																				
	D-G5□W/K59W																																				
	D-F7/J7																																				
	D-J79C																																				
	D-F79F																																				
	D-F7BA																																				
	D-F7BAV																																				
	D-F7□V																																				
	D-F7NT																																				
	D-F7□W(V)																																				
	D-F5/J5																																				
	D-F5BA																																				
	D-F5□W/J59W																																				
	D-F59F																																				
	D-F5NT																																				
	D-M9																																				
	D-M9□V																																				
	D-M9□W																																				
	D-M9□WV																																				
	D-M9□E(Normally closed)																																				
	D-M9□EV(Normally closed)																																				
	D-M9□A																																				
	D-M9□AV																																				
	D-Y5/Y6/Y7□/Y7□V																																				
	D-Y7BA																																				
	D-Y7□W/Y7□WV																																				
	D-P3DWA																																				
	D-P4DW																																				
	D-Y7G/H(Normally closed)																																				
	D-M9□J																																				
	D-F7NJ																																				
	D-F6□																																				
	D-F8□																																				
Reed auto switches	D-C7/C8																																				
	D-C73C/C80C																																				
	D-B5/B6																																				
	D-B59W																																				
	D-A3/A4																																				
	D-A3□A/A44A																																				
	D-A3□C/A44C																																				
	D-A7/A8																																				
	D-A7□H/A80H																																				
	D-A73C/A80C																																				
	D-A79W																																				
	D-A5/A6																																				
	D-A59W																																				
	D-A9																																				
	D-A9□V																																				
	D-E7□A/E80A																																				
	D-Z7/Z8																																				
	D-P7																																				
	D-B3																																				
	Actuator page reference	P.39		P.67	P.185	P.203	P.231	P.333	P.351	P.373		P.451		P.467	P.477	P.523	P.525	P.555	P.614	P.617	P.655	P.697	P.723		P.791	P.857	P.873					P.873	P.1035		P.1059		P.1075

	Cylinder series	MDU	CDJ5-S	CDG5-S	HYDB	HYDQ	HYDC	HYDG	MXH	MXS	MXQ□	MXQ	MXF	MXW	MXJ	MXP	MXY	MTS	MGJ	MGP-Z			MGP			MGPK	MGPW	MGQ	MGG		MGC	CXT		MGF	MGZ	MGT
	Bore size	ø25 to ø63	ø10, ø16	ø20 to ø100	ø20 to ø63	ø80, ø100	ø20 to ø63	ø32 to ø63	ø32 to ø63	ø6 to ø20	ø6 to ø25	ø6 to ø25	ø6 to ø20	ø8 to ø25	ø8 to ø25	ø4, ø6, ø8	ø12, ø16	ø6 to ø16	ø6, ø10, ø12, ø16	ø8 to ø40	ø6, ø10	ø12 to ø20	ø25	ø32 to ø100	ø20	ø25	ø32 to ø100	ø16, ø32	ø20, ø25	ø32 to ø63	ø12 to ø100	ø20 to ø63	ø80 to ø100	ø20 to ø50	ø12 to ø25	ø32, ø40	ø40, ø63, ø100	ø20 to ø80	ø63 to ø100
Solid state auto switches	D-H7																																					
	D-H7C																																					
	D-H7BA																																					
	D-H7NF																																					
	D-H7□W																																					
	D-G5/K5																																					
	D-G5BA																																					
	D-G59F																																					
	D-G5NT																																					
	D-G5□W/K59W																																					
	D-F7/J7																																					
	D-J79C																																					
	D-F79F																																					
	D-F7BA																																					
	D-F7BAV																																					
	D-F7□V																																					
	D-F7NT																																					
	D-F7□W(V)																																					
	D-F5/J5																																					
	D-F5BA																																					
	D-F5□W/J59W																																					
	D-F59F																																					
	D-F5NT																																					
	D-M9																																					
	D-M9□V																																					
	D-M9□W																																					
	D-M9□WV																																					
	D-M9□E(Normally closed)																																					
	D-M9□EV(Normally closed)																																					
	D-M9□A																																					
	D-M9□AV																																					
	D-Y5/Y6/Y7□/Y7□V																																					
	D-Y7BA																																					
	D-Y7□W/Y7□WV																																					
	D-P3DWA																																					
	D-P4DW																																					
	D-Y7G/H(Normally closed)																																					
	D-M9□J																																					
	D-F7NJ																																					
	D-F6□																																					
	D-F8□																																					
Reed auto switches	D-C7/C8																																					
	D-C73C/C80C																																					
	D-B5/B6																																					
	D-B59W																																					
	D-A3/A4																																					
	D-A3□A/A44A																																					
	D-A3□C/A44C																																					
	D-A7/A8																																					
	D-A7□H/A80H																																					
	D-A73C/A80C																																					
	D-A79W																																					
	D-A5/A6																																					
	D-A59W																																					
	D-A9																																					
	D-A9□V																																					
	D-E7□A/E80A																																					
	D-Z7/Z8																																					
	D-P7																																					
	D-B3																																					
	Actuator page reference	P.1087	P.1117		P.1148	P.1152	P.1161	P.1167	P.21	P.59	P.99	P.299	P.349	P.367	P.393	P.415	P.443	P.471	P.493	P.519	P.527			P.527			P.603	P.621	P.647	P.665		P.707	P.725		P.739	P.751	P.779

Applicable Cylinder Series

Applicable Cylinder Series 2

	Cylinder series	JMGP	CXSJ	CXS	CX2	CDBXW□	CDPXW□	MY1B	MY1M	MY1C	MY1H	MY1HT	MY1□W	MY2	MY3	CY3R	CY1S	CY1L	CY1H	CY1F	CYP	REAR	REAS	REAL	REAH	REBR	REBH	REC	CDJ2Y	CDM2Y
	Bore size	ø12 to ø63	ø6, ø10	ø6 to ø32	ø10, ø15, ø25	ø10	ø16 to ø32	ø10 to ø32	ø10 to ø20	ø25 to ø40	ø50	ø63 to ø100	ø16, ø20	ø25 to ø63	ø16, ø20	ø25 to ø63	ø10 to ø20	ø25 to ø40	ø50, ø63	ø16, ø20	ø25 to ø63	ø16, ø25, ø40	ø16 to ø63	ø6 to ø20	ø25 to ø63	ø6 to ø40	ø6 to ø40	ø10 to ø32	ø10, ø15, ø25	ø15, ø32	ø10, ø15, ø20	ø25 to ø40	ø10 to ø40	ø10 to ø40	ø10 to ø32	ø15	ø25, ø32	ø15 to ø32	ø20 to ø40	ø10 to ø16	ø20 to ø40
Solid state auto switches	D-H7																																								
	D-H7C																																								
	D-H7BA																																								
	D-H7NF																																								
	D-H7□W																																								
	D-G5/K5																																								
	D-G5BA																																								
	D-G59F																																								
	D-G5NT																																								
	D-G5□W/K59W																																								
	D-F7/J7																																								
	D-J79C																																								
	D-F79F																																								
	D-F7BA																																								
	D-F7BAV																																								
	D-F7□V																																								
	D-F7NT																																								
	D-F7□W(V)																																								
	D-F5/J5																																								
	D-F5BA																																								
	D-F5□W/J59W																																								
	D-F59F																																								
	D-F5NT																																								
	D-M9																																								
	D-M9□V																																								
	D-M9□W																																								
	D-M9□WV																																								
	D-M9□E(Normally closed)																																								
	D-M9□EV(Normally closed)																																								
	D-M9□A																																								
	D-M9□AV																																								
	D-Y5/Y6/Y7□/Y7□V																																								
	D-Y7BA																																								
	D-Y7□W/Y7□WV																																								
	D-P3DWA																																								
	D-P4DW																																								
	D-Y7G/H(Normally closed)																																								
	D-M9□J																																								
	D-F7NJ																																								
	D-F6□																																								
	D-F8□																																								
Reed auto switches	D-C7/C8																																								
	D-C73C/C80C																																								
	D-B5/B6																																								
	D-B59W																																								
	D-A3/A4																																								
	D-A3□A/A44A																																								
	D-A3□C/A44C																																								
	D-A7/A8																																								
	D-A7□H/A80H																																								
	D-A73C/A80C																																								
	D-A79W																																								
	D-A5/A6																																								
	D-A59W																																								
	D-A9																																								
	D-A9□V																																								
	D-E7□A/E80A																																								
	D-Z7/Z8																																								
	D-P7																																								
	D-B3																																								
	Actuator page reference	P.791	P.807	P.869	P.880			P.933					P.1055	P.1083	P.1119	P.1173	P.1199	P.1225	P.1237	P.1255	P.1275	P.23				P.95		P.125	P.145	

	Cylinder series	CDG1Y		MBY	CDA2Y	CDS2Y	CDQSY	CDQ2Y	CDJ2X	CDM2X	CDQSX	CDQ2X	CDUX	RHC	RZQ	MK		MK2T	CKG1	CKP1	CLK2G	CLK2P	CKQG	CLKQG	CKQP	CLKQP	RSDQ		RSDG	RS2H	RSH	MIS/MIW	CDNG	MDWB	CDNA2
	Bore size	ø20 to ø63	ø80, ø100	ø32 to ø100	ø40 to ø100	ø125 to ø160	ø12 to ø20	ø25	ø32 to ø100	ø10 to ø16	ø20 to ø40	ø12 to ø20	ø25	ø32 to ø100	ø10 to ø32	ø20 to ø63	ø80 to ø100	ø32 to ø63	ø12, ø16	ø20, ø25	ø32 to ø63	ø20 to ø63	ø40 to ø63	ø40 to ø63	ø40 to ø63	ø40 to ø63	ø50	ø50	ø50	ø50	ø12	ø16, ø20	ø32, ø40, ø50	ø40, ø50	ø50 to ø80	ø20, ø32	ø6, ø12, ø20, ø25, ø32	ø20 to ø40	ø32 to ø100	ø40 to ø100
Solid state auto switches	D-H7	■								■	■					■																	■					■		
	D-H7C	■								■	■					■																	■					■		
	D-H7BA															■																	■					■		
	D-H7NF	■								■	■					■																	■					■		
	D-H7□W	■								■	■					■																	■					■		
	D-G5/K5	■	■		■											■	■																							■
	D-G5BA															■	■																							■
	D-G59F	■	■		■											■	■																							■
	D-G5NT	■	■		■											■	■																				■			■
	D-G5□W/K59W	■	■		■											■	■																							■
	D-F7/J7								■	■			■				■		■	■	■				■	■			■	■										
	D-J79C								■	■			■				■		■	■	■				■	■			■	■										
	D-F79F								■	■			■				■		■	■	■				■	■			■	■										
	D-F7BA																■		■	■	■				■	■			■	■										
	D-F7BAV																■		■	■	■				■	■			■	■										
	D-F7□V								■	■			■				■		■	■	■				■	■			■	■										
	D-F7NT								■	■			■				■		■	■	■				■	■			■	■										
	D-F7□W(V)								■	■			■				■		■	■	■				■	■			■	■										
	D-F5/J5			■	■	■																																■	■
	D-F5BA			■		■																																■	■
	D-F5□W/J59W			■	■	■																																■	■
	D-F59F			■	■	■																																■	■
	D-F5NT			■	■	■																																■	■
	D-M9	■		■	■	■	■	■	■	■	■	■	■	■			■	■	■	■		■		■	■	■		■	■	■	■	■	■	■	■	■	■	■	■
	D-M9□V	■		■	■	■	■	■	■	■	■	■	■	■			■	■	■	■		■		■	■	■		■	■	■	■	■	■	■	■	■	■	■	■
	D-M9□W	■		■	■	■	■	■	■	■	■	■	■	■			■	■	■	■		■		■	■	■		■	■	■	■	■	■	■	■	■	■	■	■
	D-M9□WV	■		■	■	■	■	■	■	■	■	■	■	■			■	■	■	■		■		■	■	■		■	■	■	■	■	■	■	■	■	■	■	■
	D-M9□E(Normally closed)			■	■	■	■	■	■	■	■	■	■	■			■	■	■	■		■		■	■	■		■	■	■	■	■	■	■	■	■	■	■	■
	D-M9□EV(Normally closed)			■	■	■	■	■	■	■	■	■	■	■			■	■	■	■		■		■	■	■		■	■	■	■	■	■	■	■	■	■	■	■
	D-M9□A	■		■	■	■	■	■	■	■	■	■	■	■			■	■	■	■								■	■	■	■	■	■	■	■	■	■	■	■
	D-M9□AV	■		■	■	■	■	■	■	■	■	■	■	■			■	■	■	■								■	■	■	■	■			■	■	■	■	■
	D-Y5/Y6/Y7□/Y7□V			■	■	■																																■	■
	D-Y7BA			■		■																													■			■	■
	D-Y7□W/Y7□WV			■	■	■																													■			■	■
	D-P3DWA			■		■		■	■			■	■					■		■		■		■	■					■		■						■	■
	D-P4DW			■	■								■				■		■	■		■		■	■													■	■
	D-Y7G/H(Normally closed)			■																												■						■	■
	D-M9□J																																						
	D-F7NJ																																						
	D-F6□																																						
	D-F8□																																						
Reed auto switches	D-C7/C8	■								■	■					■														■			■					■		
	D-C73C/C80C	■								■	■					■														■			■					■		
	D-B5/B6	■	■								■					■	■				■		■										■					■		
	D-B59W	■	■								■					■	■																■					■		
	D-A3/A4			■	■	■										■	■																						■	■
	D-A3□A/A44A										■																													
	D-A3□C/A44C				■																																			■
	D-A7/A8								■	■			■				■		■	■	■				■				■	■										
	D-A7□H/A80H								■	■			■				■		■	■	■				■				■	■										
	D-A73C/A80C								■	■			■				■		■	■	■				■				■	■										
	D-A79W								■	■			■				■		■	■	■				■				■	■										
	D-A5/A6			■	■	■																																■	■
	D-A59W			■	■	■																																■	■
	D-A9	■		■	■	■	■	■	■	■	■	■	■	■	■		■	■	■	■	■	■		■	■			■	■	■	■			■	■	■	■	■	■
	D-A9□V	■		■	■	■	■	■	■	■	■	■	■	■	■		■	■	■	■	■	■		■	■			■	■	■		■		■	■	■	■	■	■
	D-E7□A/E80A																																						
	D-Z7/Z8			■	■	■																										■						■	■
	D-P7																			■		■				■	■												
	D-B3																																						
	Actuator page reference	P.145		P.196	P.145			P.263						P.359	P.381	P.397		P.419	P.435	P.461			P.515				P.601		P.622	P.637	P.653	P.665	P.689	P.713	P.757

Applicable Cylinder Series

Applicable Cylinder Series 3

	Cylinder series	CDNS	CDLS	CDLQ		RDLQ	MDLU	MLGP		ML1C	CDLJ2	CDLM2	CDLG1	MLGC	CDL1			CEP1	CE1		CE2	ML2B	CVQ	CVQM	CDVJ5	CDVJ3	CDVM5	CDVM5K	CDVM3	CDVM3K	CDV3	CDV3K	CDVS1	CDVS1K	MVGQ
	Bore size	ø125 to ø160	ø125 to ø200	ø20	ø25	ø32 to ø100	ø25 to ø50	ø20	ø25	ø32 to ø100	ø25 to ø40	ø16	ø20 to ø40	ø20 to ø40	ø20 to ø40	ø40	ø50	ø63 to ø100	ø125 to ø160	ø12, ø20	ø12, ø20	ø32 to ø63	ø40 to ø100	ø25 to ø40	ø32 to ø63	ø32 to ø63	ø10, ø16	ø10, ø16	ø20 to ø40	ø20 to ø40	ø20 to ø40	ø20 to ø40	ø40 to ø100	ø40 to ø63	ø40 to ø100	ø40 to ø63	ø12 to ø100
Solid state auto switches	D-H7											■			■												■		■		■					
	D-H7C											■	■	■	■												■	■	■	■	■	■				
	D-H7BA											■	■	■	■												■	■	■	■	■	■				
	D-H7NF											■	■	■	■												■	■	■	■	■	■				
	D-H7□W											■	■	■	■												■	■	■	■	■	■				
	D-G5/K5														■	■	■	■					■										■	■	■	■
	D-G5BA														■	■	■	■					■													
	D-G59F														■	■	■	■					■										■	■	■	■
	D-G5NT												■	■	■	■	■	■					■						■	■	■	■				
	D-G5□W/K59W														■	■	■	■					■										■	■	■	■
	D-F7/J7					■	■	■													■	■					■	■								
	D-J79C					■	■	■													■	■					■	■								
	D-F79F					■	■	■													■	■					■	■								
	D-F7BA					■	■	■													■	■														
	D-F7BAV					■	■	■													■	■														
	D-F7□V					■	■	■													■	■					■	■								
	D-F7NT					■	■	■													■	■					■	■								
	D-F7□W(V)					■	■	■													■	■					■	■								
	D-F5/J5	■	■												■	■	■	■					■										■	■	■	■
	D-F5BA	■	■												■	■	■	■					■													
	D-F5□W/J59W	■	■												■	■	■	■					■										■	■	■	■
	D-F59F	■	■												■	■	■	■					■										■	■	■	■
	D-F5NT	■	■												■	■	■	■					■										■	■	■	■
	D-M9	■	■	■	■	■	■	■	■	■		■	■	■	■				■			■	■		■	■	■	■	■	■	■	■	■	■	■
	D-M9□V	■	■	■	■	■	■	■	■	■		■	■	■	■				■			■	■		■	■	■	■	■	■	■	■	■	■	■
	D-M9□W	■	■	■	■	■	■	■	■	■		■	■	■	■				■			■	■		■	■	■	■	■	■	■	■	■	■	■
	D-M9□WV	■	■	■	■	■	■	■	■	■		■	■	■	■				■			■	■		■	■	■	■	■	■	■	■	■	■	■
	D-M9□E(Normally closed)	■	■	■	■	■	■	■	■	■		■	■	■	■				■			■	■		■	■	■	■	■	■	■	■	■	■	■
	D-M9□EV(Normally closed)	■	■	■	■	■	■	■	■	■		■	■	■	■				■			■	■		■	■									
	D-M9□A	■	■	■	■	■	■	■	■	■		■	■	■	■				■			■	■		■	■	■	■	■	■	■	■	■	■	■
	D-M9□AV	■	■	■	■	■	■	■	■	■		■	■	■	■				■			■	■		■	■	■	■	■	■	■	■	■	■	■
	D-Y5/Y6/Y7□/Y7□V	■						■	■	■					■								■	■									■	■	■	■
	D-Y7BA	■	■					■	■	■					■								■													
	D-Y7□W/Y7□WV	■	■					■	■	■					■								■	■									■	■	■	■
	D-P3DWA				■	■			■	■																										
	D-P4DW					■		■		■					■	■	■																			
	D-Y7G/H(Normally closed)	■	■					■	■	■					■			■					■	■									■	■	■	■
	D-M9□J																																			
	D-F7NJ																																			
	D-F6□																																			
	D-F8□																																			
Reed auto switches	D-C7/C8											■	■	■	■												■	■	■	■	■	■				
	D-C73C/C80C											■	■	■													■	■	■	■	■	■				
	D-B5/B6												■	■	■	■	■						■													
	D-B59W												■	■	■	■	■						■						■	■	■	■	■	■	■	■
	D-A3/A4	■	■												■	■	■	■					■										■	■	■	■
	D-A3□A/A44A												■																							
	D-A3□C/A44C														■	■	■						■										■	■	■	■
	D-A7/A8					■	■	■													■	■					■	■								
	D-A7□H/A80H					■	■	■													■	■					■	■								
	D-A73C/A80C					■	■	■													■	■					■	■								
	D-A79W					■	■	■													■	■					■	■								
	D-A5/A6	■	■												■	■	■	■					■										■	■	■	■
	D-A59W	■	■												■	■	■	■					■										■	■	■	■
	D-A9	■	■	■	■	■	■	■	■	■		■	■	■	■		■	■	■		■	■		■	■	■	■	■	■	■	■	■	■	■	■
	D-A9□V	■	■	■	■	■	■	■	■	■			■	■	■		■	■	■		■	■		■	■	■							■	■	■	■
	D-E7□A/E80A										■																									
	D-Z7/Z8	■	■					■	■	■					■	■	■	■					■	■									■	■	■	■
	D-P7																																			
	D-B3																																			
	Actuator page reference	P.795	P.819	P.847		P.875	P.899	P.917		P.949	P.963	P.975	P.992	P.1009	P.1019			P.1049	P.1064		P.1087	P.1105	P.1129	P.1143	P.1154	P.1164	P.1175				P.1216		P.1238		P.1253

Auto Switch Variations

Auto Switch Variations 1

Function	Type	Auto switch mounting type	Electrical entry	Auto switch model	Page
General purpose auto switches	Solid state	Direct	Grommet	D-M9N/M9P/M9B*	1304
				D-M9NV/M9PV/M9BV*	
				D-M9N-5/M9P-5/M9B-5	1305
				D-F8N/F8P/F8B	1307
				D-M9NE/M9PE/M9BE (Normally closed)*	1308
				D-M9NEV/M9PEV/M9BEV (Normally closed)*	
				D-Y59A/Y59B/Y7P**	1309
				D-Y69A/Y69B/Y7PV**	
				D-Y7G/Y7H (Normally closed)**	1310
		Band	Grommet	D-H7A1/H7A2/H7B	1311
				D-G59/G5P/K59	1312
			Connector	D-H7C	1313
		Rail	Grommet	D-F79/F7P/J79	1316
				D-F7NV/F7PV/F7BV	1317
			Connector	D-J79C	1318
		Tie-rod	Grommet	D-F59/F5P/J59	1319
	Reed	Direct	Grommet	D-A90/A93/A96*	1362
				D-A90V/A93V/A96V*	
				D-Z73/Z76/Z80**	1373
				D-E73A/E76A/E80A	1374
		Band	Grommet	D-C73/C76/C80	1363
				D-B53/B54/B64	1364
			Connector	D-C73C/C80C	1365
			Terminal conduit	D-A33/A34	1366
				D-A33A/A34A	1367
			DIN terminal	D-A44	1366
				D-A44A	1367
		Rail	Grommet	D-A72/A73/A80	1368
				D-A72H/A73H/A76H/A80H	1369
			Connector	D-A73C/A80C	1370
		Tie-rod	Grommet	D-A53/A54/A56/A64/A67	1371
			Terminal conduit	D-A33C/A34C	1372
			DIN terminal	D-A44C	

∗ These auto switches can be mounted with a band, a rail, a tie-rod or a square groove when auto switch mounting brackets are used. Refer to pages 1386, 1390, 1394 and 1401 to 1403 for details.
∗∗ These auto switches can be mounted with a tie-rod when auto switch mounting brackets are used. Refer to page 1397 for details.

Direct mounting

Band mounting

Rail mounting

Tie-rod mounting

Auto Switch Variations

Auto Switch Variations 2

Function	Type	Auto switch mounting type	Electrical entry	Auto switch model	Page
2-color indicator	Solid state	Direct	Grommet	D-M9NW/M9PW/M9BW*	1321
				D-M9NWV/M9PWV/M9BWV*	
				D-Y7NW/Y7PW/Y7BW**	1322
				D-Y7NWV/Y7PWV/Y7BWV**	
		Band	Grommet	D-H7NW/H7PW/H7BW	1323
				D-G59W/G5PW/K59W	1324
		Rail	Grommet	D-F79W/F7PW/J79W	1325
				D-F7NWV/F7BWV	1326
		Tie-rod	Grommet	D-F59W/F5PW/J59W	1327
	Reed	Band	Grommet	D-B59W	1375
		Rail	Grommet	D-A79W	1376
		Tie-rod	Grommet	D-A59W	1377

* These auto switches can be mounted with a band, a rail, a tie-rod or a square groove when auto switch mounting brackets are used. Refer to pages 1386, 1390, 1394 and 1401 to 1403 for details.
** These auto switches can be mounted with a tie-rod when auto switch mounting brackets are used. Refer to page 1397 for details.

2-color indicator

Easily identifiable, proper operating range

●Mounting positions can be set easily.

Proper operating ranges can be set while watching the lights.

●Displacement of the detecting position can be visually checked.

Trouble caused by incorrect detection can be prevented beforehand.

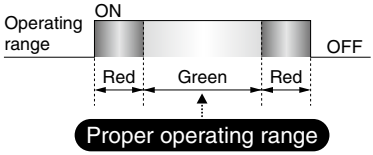

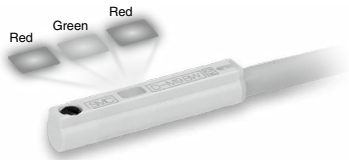

A green light lights up at the proper operating range.

Even if 2-color indicator solid state auto switches are fixed at the proper operating range (the green light lights up), the operation may become unstable depending on the installation environment or magnetic field disturbance. (Magnetic body, external magnetic field, proximal installation of cylinders with built-in magnet and actuators, temperature change, other factors for magnetic force fluctuation during operation, etc.)

With Pre-wired Connector Type

Less wiring work

●Cable with connector allows for reduced wiring hassle

●M8 and M12 connectors available

Related Products

Fieldbus System/Wireless System EX600/EX600-W/EXW1 Series

•Wired/wireless signal transmission to the host system via M8/M12 connector connection

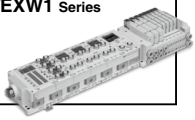

Function	Type	Auto switch mounting type	Electrical entry	Auto switch model	Page
The diagnostic output signal can be detected in an unsteady detecting area.					
2-color indicator auto switch with diagnostic output	Solid state	Band	Grommet	D-H7NF	1328
				D-G59F	1329
		Rail	Grommet	D-F79F	1330
		Tie-rod	Grommet	D-F59F	1331
Water resistant (coolant) type					
Water resistant 2-color indicator auto switch	Solid state	Direct	Grommet	D-M9□A*	1332
				D-M9□AV*	
				D-Y7BA**	1333
		Band	Grommet	D-H7BA	1334
				D-G5BA	1335
		Rail	Grommet	D-F7BA	1336
				D-F7BAV	
		Tie-rod	Grommet	D-F5BA	1337
Hygienic type					
Hygienic	Solid state	Direct	Grommet	D-F6N/F6P/F6B	1338
With built-in OFF-delay timer (200 ms)					
Auto switch with timer	Solid state	Band	Grommet	D-G5NT	1339
		Rail	Grommet	D-F7NT	1340
		Tie-rod	Grommet	D-F5NT	1341
Can be used in an environment where magnetic field disturbances are generated.					
Magnetic field resistant auto switch	Solid state	Rail, Tie-rod, Direct	Grommet	D-P3DWASC/P3DWASE	1342
				D-P3DWA	1343
		Rail	Grommet	D-P4DWSC/P4DWSE/P4DW□DPC	1344
				D-P4DW	1345
	Reed	Rod	Grommet	D-P79WSE	1378
				D-P74	1379
Can be used in a high-temperature environment.					
Heat resistant auto switch	Solid state	Sensor unit: Rail Amplifier unit: DIN rail	Grommet	D-M9NJ/M9PJ	1346
				D-F7NJ	1347
	Reed	Band	Terminal conduit	D-B30/31/35	1385
			Grommet	D-B30J/31J/35J	
Simple workpiece recognition is possible.					
Trimmer auto switch	Solid state	Rail	Grommet	D-M9K/F7K/Y7K/RNK/RPK	1349
		Direct			
The stroke position is output with an analog signal.					
Actuator position sensor	Solid state	Direct	Tie-rod	D-MP	1389
		Tie-rod			

∗ These auto switches can be mounted with a band, a rail, a tie-rod or a square groove when auto switch mounting brackets are used. Refer to pages 1386, 1390, 1394 and 1401 to 1403 for details.
∗∗ These auto switches can be mounted with a tie-rod when auto switch mounting brackets are used. Refer to page 1397 for details.

2-color indicator with diagnostic output

Water resistant 2-color indicator

Hygienic

With timer

Magnetic field resistant

Heat resistant

Trimmer auto switch

Sensor unit

Amplifier unit

SMC

Solid State Auto Switches

General Purpose Type, 2-color Indicator, 2-color Indicator with Diagnostic Output, Water Resistant 2-color Indicator, Hygienic Type, Timer Equipped Type, Magnetic Field Resistant Type, Heat Resistant Type, Trimmer Auto Switch

Solid State Auto Switch Variations

Type	Function	Auto switch mounting type	Electrical entry	Auto switch model	Page
Solid State Auto Switch	General purpose	Direct	Grommet	D-M9N/M9P/M9B	1304
				D-M9NV/M9PV/M9BV	
				D-M9N-5/D-M9P-5/D-M9B-5	1305
				D-F8N/F8P/F8B	1307
				D-M9NE/M9PE/M9BE (Normally closed)	1308
				D-M9NEV/M9PEV/M9BEV (Normally closed)	
				D-Y59A/Y59B/Y7P	1309
				D-Y69A/Y69B /Y7PV	
				D-Y7G/Y7H (Normally closed)	1310
		Band	Grommet	D-H7A1/H7A2/H7B	1311
				D-G59/G5P/K59	1312
			Connector	D-H7C	1313
		Rail	Grommet	D-F79/F7P/J79	1316
				D-F7NV/F7PV/F7BV	1317
			Connector	D-J79C	1318
		Tie-rod	Grommet	D-F59/F5P/J59	1319
	2-color indicator	Direct	Grommet	D-M9NW/M9PW/M9BW	1321
				D-M9NWV/M9PWV/M9BWV	
				D-Y7NW/Y7PW/Y7BW	1322
				D-Y7NWV/Y7PWV/Y7BWV	
		Band	Grommet	D-H7NW/H7PW/H7BW	1323
				D-G59W/G5PW/K59W	1324
		Rail	Grommet	D-F79W/F7PW/J79W	1325
				D-F7NWV/F7BWV	1326
		Tie-rod	Grommet	D-F59W/F5PW/J59W	1327
	2-color indicator with diagnostic output	Band	Grommet	D-H7NF	1328
				D-G59F	1329
		Rail	Grommet	D-F79F	1330
		Tie-rod	Grommet	D-F59F	1331
	Water resistant 2-color indicator	Direct	Grommet	D-M9PA/M9NA/M9BA	1332
				D-M9PAV/M9NAV/M9BAV	
				D-Y7BA	1333
		Band	Grommet	D-H7BA	1334
				D-G5BA	1335
		Rail	Grommet	D-F7BA	1336
				D-F7BAV	
		Tie-rod	Grommet	D-F5BA	1337
	Hygienic	Direct	Grommet	D-F6N/F6P/F6B	1338
	With timer	Band	Grommet	D-G5NT	1339
		Rail	Grommet	D-F7NT	1340
		Tie-rod	Grommet	D-F5NT	1341
	Magnetic field resistance	Rail, Tie-rod, Direct	Grommet	D-P3DWASC/P3DWASE	1342
				D-P3DWA	1343
		Rail	Grommet	D-P4DWSC/P4DWSE/P4DW□DPC	1344
				D-P4DW	1345
	Heat resistant	Sensor section: Rail Amplifier section: DIN rail	Grommet	D-M9NJ/M9PJ	1346
				D-F7NJ	1347
	Trimmer Auto Switch	Rail	Grommet	D-M9K/F7K/Y7K/RNK/RPK	1349
		Direct			

Solid State Auto Switch Direct Mounting Type
D-M9N(V)/D-M9P(V)/D-M9B(V)

CE UK CA RoHS

Refer to SMC website for the details of the products conforming to the international standards.

Grommet

- **2-wire load current is reduced (2.5 to 40 mA).**
- **Using flexible cable as standard spec.**

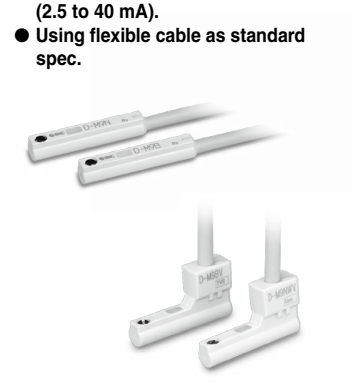

⚠Caution

Precautions

Fix the auto switch with the existing screw installed on the auto switch body. The auto switch may be damaged if a screw other than the one supplied is used.

Auto Switch Specifications

PLC: Programmable Logic Controller

D-M9□, D-M9□V (With indicator light)						
Auto switch model	D-M9N	D-M9NV	D-M9P	D-M9PV	D-M9B	D-M9BV
Electrical entry direction	In-line	Perpendicular	In-line	Perpendicular	In-line	Perpendicular
Wiring type	3-wire				2-wire	
Output type	NPN		PNP		—	
Applicable load	IC circuit, Relay, PLC				24 VDC relay, PLC	
Power supply voltage	5, 12, 24 VDC (4.5 to 28 V)				—	
Current consumption	10 mA or less				—	
Load voltage	28 VDC or less		—		24 VDC (10 to 28 VDC)	
Load current	40 mA or less				2.5 to 40 mA	
Internal voltage drop	0.8 V or less at 10 mA (2 V or less at 40 mA)				4 V or less	
Leakage current	100 μA or less at 24 VDC				0.8 mA or less	
Indicator light	Red LED illuminates when turned ON.					
Standard	CE/UKCA marking					

Oilproof Heavy-duty Lead Wire Specifications

Auto switch model		D-M9N(V)	D-M9P(V)	D-M9B(V)
Sheath	Outside diameter [mm]	2.6		
Insulator	Number of cores	3 cores (Brown/Blue/Black)		2 cores (Brown/Blue)
	Outside diameter [mm]	0.88		
Conductor	Effective area [mm²]	0.15		
	Strand diameter [mm]	0.05		
Minimum bending radius [mm] (Reference values)		17		

Note 1) Refer to page 1298 for solid state auto switch common specifications.
Note 2) Refer to page 1298 for lead wire lengths.

Weight

(g)

Auto switch model		D-M9N(V)	D-M9P(V)	D-M9B(V)
Lead wire length	0.5 m (**Nil**)	8		7
	1 m (**M**)	14		13
	3 m (**L**)	41		38
	5 m (**Z**)	68		63

Dimensions

(mm)

D-M9□

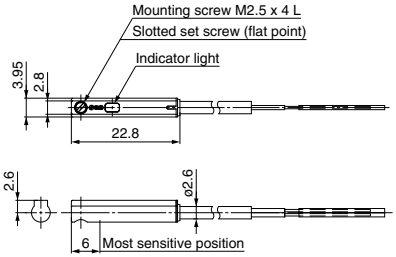

D-M9□V

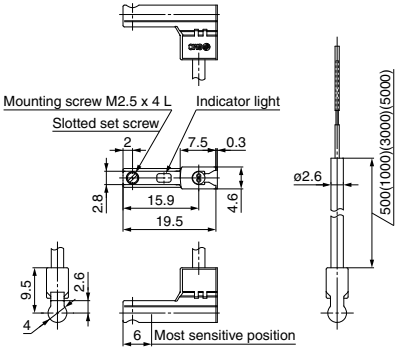

SMC

Solid State Auto Switch
Direct Mounting Type
D-F8N/D-F8P/D-F8B

Refer to SMC website for the details of the products conforming to the international standards.

Grommet

⚠Caution

Precautions

Fix the auto switch with the existing screw installed on the auto switch body. The auto switch may be damaged if a screw other than the one supplied is used.

Auto Switch Specifications

PLC: Programmable Logic Controller

D-F8□ (With indicator light)			
Auto switch model	D-F8N	D-F8P	D-F8B
Electrical entry direction	Perpendicular	Perpendicular	Perpendicular
Wiring type	3-wire		2-wire
Output type	NPN	PNP	—
Applicable load	IC circuit, 24 VDC Relay, PLC		24 VDC relay, PLC
Power supply voltage	5, 12, 24 VDC (4.5 to 28 VDC)		—
Current consumption	10 mA or less		—
Load voltage	28 VDC or less	—	24 VDC (10 to 28 VDC)
Load current	40 mA or less		2.5 to 40 mA
Internal voltage drop	0.8 V or less at 10 mA load current (2 V or less at 40 mA load current)		4 V or less
Leakage current	100 μA or less at 24 VDC		0.8 mA or less at 24 VDC
Indicator light	Red LED illuminates when turned ON.		
Standard	CE/UKCA marking		

Oilproof Heavy-duty Lead Wire Specifications

Auto switch model		D-F8N	D-F8P	D-F8B
Sheath	Outside diameter [mm]	ø2.7		
Insulator	Number of cores	3 cores (Brown/Blue/Black)		2 cores (Brown/Blue)
	Outside diameter [mm]	ø0.91		ø0.96
Conductor	Effective area [mm²]	0.15		0.18
	Strand diameter [mm]	ø0.08		
Minimum bending radius [mm] (Reference values)		17		

Note 1) Refer to page 1298 for solid state auto switch common specifications.
Note 2) Refer to page 1298 for lead wire lengths.

Weight

(g)

Auto switch model		D-F8N	D-F8P	D-F8B
Lead wire length	0.5 m (**Nil**)	7		
	3 m (**L**)	32		
	5 m (**Z**)	52		

Dimensions

(mm)

D-F8N/D-F8P/D-F8B

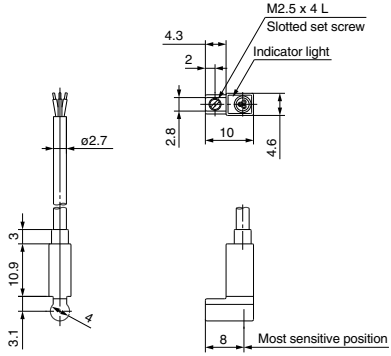

Normally Closed Solid State Auto Switch Direct Mounting Type
D-M9NE(V)/D-M9PE(V)/D-M9BE(V)

CE UK CA RoHS

Refer to SMC website for the details of the products conforming to the international standards.

Grommet

- **Output signal turns on when no magnetic force is detected.**
- **Can be used for the actuator adopted by the solid state auto switch D-M9 series (excluding special order products)**

⚠Caution

Precautions

Fix the auto switch with the existing screw installed on the auto switch body. The auto switch may be damaged if a screw other than the one supplied is used.

Auto Switch Specifications

PLC: Programmable Logic Controller

D-M9□E, D-M9□EV (With indicator light)						
Auto switch model	D-M9NE	D-M9NEV	D-M9PE	D-M9PEV	D-M9BE	D-M9BEV
Electrical entry direction	In-line	Perpendicular	In-line	Perpendicular	In-line	Perpendicular
Wiring type	3-wire				2-wire	
Output type	NPN		PNP		—	
Applicable load	IC circuit, Relay, PLC				24 VDC relay, PLC	
Power supply voltage	5, 12, 24 VDC (4.5 to 28 V)				—	
Current consumption	10 mA or less				—	
Load voltage	28 VDC or less		—		24 VDC (10 to 28 VDC)	
Load current	40 mA or less				2.5 to 40 mA	
Internal voltage drop	0.8 V or less at 10 mA (2 V or less at 40 mA)				4 V or less	
Leakage current	100 μA or less at 24 VDC				0.8 mA or less	
Indicator light	Red LED illuminates when turned ON.					
Standard	CE/UKCA marking					

Oilproof Heavy-duty Lead Wire Specifications

Auto switch model		D-M9NE(V)	D-M9PE(V)	D-M9BE(V)
Sheath	Outside diameter [mm]	2.6		
Insulator	Number of cores	3 cores (Brown/Blue/Black)		2 cores (Brown/Blue)
	Outside diameter [mm]	0.88		
Conductor	Effective area [mm²]	0.15		
	Strand diameter [mm]	0.05		
Minimum bending radius [mm] (Reference values)		17		

Note 1) Refer to page 1298 for solid state auto switch common specifications.
Note 2) Refer to page 1298 for lead wire lengths.

Weight

(g)

Auto switch model		D-M9NE(V)	D-M9PE(V)	D-M9BE(V)
Lead wire length	0.5 m (**Nil**)	8		7
	1 m (**M**)*	14		13
	3 m (**L**)	41		38
	5 m (**Z**)*	68		63

* The 1 m and 5 m options are produced upon receipt of order.

Dimensions

(mm)

D-M9□E

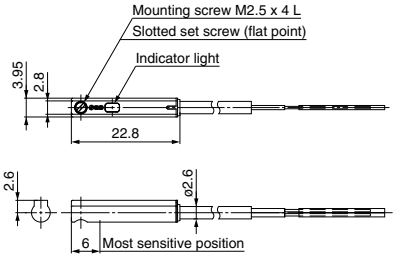

D-M9□EV

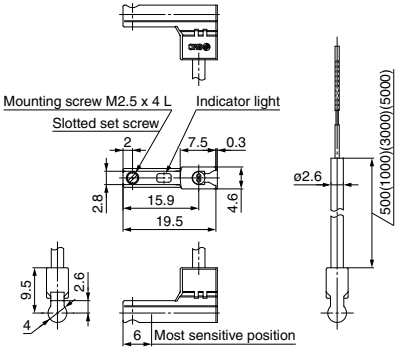

SMC

Solid State Auto Switch Direct Mounting Type
D-Y59A/B/D-Y69A/B/D-Y7P(V)

CE UKCA RoHS

Refer to SMC website for the details of the products conforming to the international standards.

Grommet

Using flexible cable as standard spec.

Auto Switch Specifications

PLC: Programmable Logic Controller

D-Y5□, D-Y6□, D-Y7P, D-Y7PV (With indicator light)						
Auto switch model	D-Y59A	D-Y69A	D-Y7P	D-Y7PV	D-Y59B	D-Y69B
Electrical entry direction	In-line	Perpendicular	In-line	Perpendicular	In-line	Perpendicular
Wiring type	3-wire				2-wire	
Output type	NPN		PNP		—	
Applicable load	IC circuit, Relay, PLC				24 VDC relay, PLC	
Power supply voltage	5, 12, 24 VDC (4.5 to 28 VDC)				—	
Current consumption	10 mA or less				—	
Load voltage	28 VDC or less		—		24 VDC (10 to 28 VDC)	
Load current	40 mA or less				2.5 to 40 mA	
Internal voltage drop	0.8 V or less at 10 mA load current (2 V or less at 40 mA load current)				4 V or less	
Leakage current	100 μA or less at 24 VDC				0.8 mA or less at 24 VDC	
Indicator light	Red LED illuminates when turned ON.					
Standard	CE/UKCA marking					

Oilproof Flexible Heavy-duty Lead Wire Specifications

Auto switch model		D-Y□9A	D-Y7P□	D-Y□9B
Sheath	Outside diameter [mm]	ø3.4		
Insulator	Number of cores	3 cores (Brown/Blue/Black)		2 cores (Brown/Blue)
	Outside diameter [mm]	ø1.0		
Conductor	Effective area [mm²]	0.15		
	Strand diameter [mm]	ø0.05		
Minimum bending radius [mm] (Reference values)		21		

Note 1) Refer to page 1298 for solid state auto switch common specifications.
Note 2) Refer to page 1298 for lead wire lengths.

Weight

(g)

Auto switch model		D-Y59A	D-Y69A	D-Y7P(V)	D-Y59B	D-Y69B
Lead wire length	0.5 m (**Nil**)	10			9	
	3 m (**L**)	53			50	
	5 m (**Z**)	87			83	

Dimensions

(mm)

D-Y59A/D-Y7P/D-Y59B

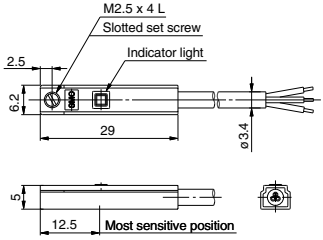

D-Y69A/D-Y7PV/D-Y69B

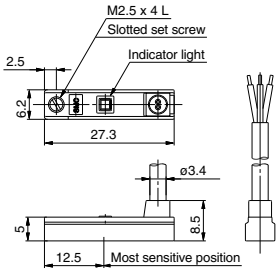

Normally Closed Solid State Auto Switch Direct Mounting Type
D-Y7G/D-Y7H

Refer to SMC website for the details of the products conforming to the international standards.

Grommet

- **Output signal turns on when no magnetic force is detected.**
- **Using flexible cable as standard spec.**

Auto Switch Specifications

PLC: Programmable Logic Controller

D-Y7G, D-Y7H (With indicator light)		
Auto switch model	**D-Y7G**	**D-Y7H**
Wiring type	3-wire	
Output type	NPN	PNP
Applicable load	IC circuit, Relay, PLC	
Power supply voltage	5, 12, 24 VDC (4.5 to 28 VDC)	
Current consumption	10 mA or less	
Load voltage	28 VDC or less	—
Load current	40 mA or less	
Internal voltage drop	0.8 V or less at 10 mA load current (2 V or less at 40 mA load current)	
Leakage current	100 μA or less at 24 VDC	
Indicator light	Red LED illuminates when detecting nothing.	
Standard	CE/UKCA marking	

Oilproof Flexible Heavy-duty Lead Wire Specifications

Auto switch model		**D-Y7G**	**D-Y7H**
Sheath	Outside diameter [mm]	ø3.4	
Insulator	Number of cores	3 cores (Brown/Blue/Black)	
	Outside diameter [mm]	ø1.0	
Conductor	Effective area [mm²]	0.15	
	Strand diameter [mm]	ø0.05	
Minimum bending radius [mm] (Reference values)		21	

Note 1) Refer to page 1298 for solid state auto switch common specifications.
Note 2) Refer to page 1298 for lead wire lengths.

Weight

(g)

Auto switch model		**D-Y7G**	**D-Y7H**
Lead wire length	0.5 m (**Nil**)	10	
	3 m (**L**)	53	
	5 m (**Z**)	87	

Dimensions

(mm)

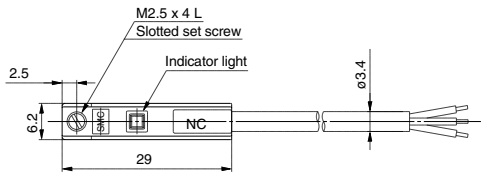

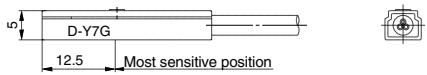

SMC

Solid State Auto Switch
Band Mounting Type
D-H7A1/D-H7A2/D-H7B

Refer to SMC website for the details of the products conforming to the international standards.

Grommet

Auto Switch Specifications

PLC: Programmable Logic Controller

D-H7□ (With indicator light)			
Auto switch model	**D-H7A1**	**D-H7A2**	**D-H7B**
Wiring type	3-wire		2-wire
Output type	NPN	PNP	—
Applicable load	IC circuit, Relay, PLC		24 VDC Relay, PLC
Power supply voltage	5, 12, 24 VDC (4.5 to 28 VDC)		—
Current consumption	10 mA or less		—
Load voltage	28 VDC or less	—	24 VDC (10 to 28 VDC)
Load current	40 mA or less		2.5 to 40 mA
Internal voltage drop	0.8 V or less at 10 mA load current (2 V or less at 40 mA load current)		4 V or less
Leakage current	100 μA or less at 24 VDC		0.8 mA or less at 24 VDC
Indicator light	Red LED illuminates when turned ON.		
Standard	CE/UKCA marking		

Oilproof Heavy-duty Lead Wire Specifications

Auto switch model		**D-H7A1**	**D-H7A2**	**D-H7B**
Sheath	Outside diameter [mm]	ø3.4		
Insulator	Number of cores	3 cores (Brown/Blue/Black)		2 cores (Brown/Blue)
	Outside diameter [mm]	ø1.1		
Conductor	Effective area [mm²]	0.2		
	Strand diameter [mm]	ø0.08		
Minimum bending radius [mm] (Reference values)		21		

Note 1) Refer to page 1298 for solid state auto switch common specifications.
Note 2) Refer to page 1298 for lead wire lengths.

Weight

(g)

Auto switch model		**D-H7A1**	**D-H7A2**	**D-H7B**
Lead wire length	0.5 m (**Nil**)	13		11
	3 m (**L**)	57		50
	5 m (**Z**)	92		81

Dimensions

(mm)

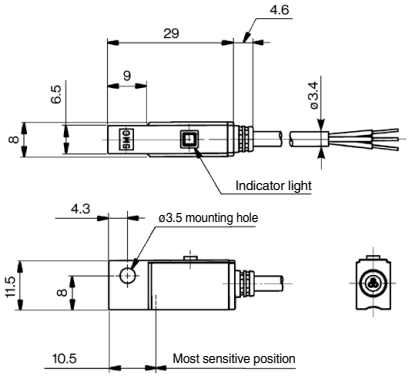

Solid State Auto Switch
Band Mounting Type
D-G59/D-G5P/D-K59

Refer to SMC website for the details of the products conforming to the international standards.

Grommet

Auto Switch Specifications

PLC: Programmable Logic Controller

D-G5□, D-K59 (With indicator light)			
Auto switch model	D-G59	D-G5P	D-K59
Wiring type	3-wire		2-wire
Output type	NPN	PNP	—
Applicable load	IC circuit, Relay, PLC		24 VDC Relay, PLC
Power supply voltage	5, 12, 24 VDC (4.5 to 28 VDC)		—
Current consumption	10 mA or less		—
Load voltage	28 VDC or less	—	24 VDC (10 to 28 VDC)
Load current	40 mA or less		2.5 to 40 mA
Internal voltage drop	0.8 V or less at 10 mA load current (2 V or less at 40 mA load current)		4 V or less
Leakage current	100 μA or less at 24 VDC		0.8 mA or less at 24 VDC
Indicator light	Red LED illuminates when turned ON.		
Standard	CE/UKCA marking		

Oilproof Heavy-duty Lead Wire Specifications

Auto switch model		D-G59	D-G5P	D-K59
Sheath	Outside diameter [mm]	ø4		
Insulator	Number of cores	3 cores (Brown/Blue/Black)		2 cores (Brown/Blue)
	Outside diameter [mm]	ø1.22		
Conductor	Effective area [mm²]	0.3		
	Strand diameter [mm]	ø0.08		
Minimum bending radius [mm] (Reference values)		24		

Note 1) Refer to page 1298 for solid state auto switch common specifications.
Note 2) Refer to page 1298 for lead wire lengths.

Weight

(g)

Auto switch model		D-G59	D-G5P	D-K59
Lead wire length	0.5 m (**Nil**)	20		18
	3 m (**L**)	78		68
	5 m (**Z**)	124		108

Dimensions

(mm)

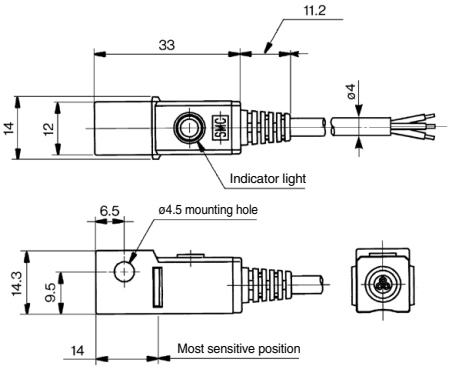

Solid State Auto Switch Band Mounting Type
D-H7C

Refer to SMC website for the details of the products conforming to the international standards.

Connector

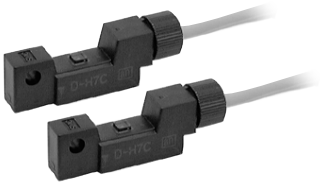

⚠Caution

Precautions

1. Confirm that the connector is appropriately tightened. If tightened insufficiently, the waterproof performance will deteriorate.
2. Refer to page 1385 for the details.

Lead wires with a connector indication

Part No. of Lead Wires with Connectors
(Applicable only for connector type)

Model	Lead wire length
D-LC05	0.5 m
D-LC30	3 m
D-LC50	5 m

Auto Switch Specifications

PLC: Programmable Logic Controller

D-H7C (With indicator light)	
Auto switch model	**D-H7C**
Wiring type	2-wire
Output type	—
Applicable load	24 VDC Relay, PLC
Power supply voltage	—
Current consumption	—
Load voltage	24 VDC (10 to 28 VDC)
Load current	2.5 to 40 mA
Internal voltage drop	4 V or less
Leakage current	0.8 mA or less at 24 VDC
Indicator light	Red LED illuminates when turned ON.
Standard	CE/UKCA marking

Note 1) Refer to page 1298 for solid state auto switch common specifications.
Note 2) Refer to page 1298 for lead wire lengths.
Note 3) Lead wires with a connector may be shipped with switches.

Weight

(g)

Auto switch model		D-H7C
Lead wire length	0.5 m (**Nil**)	15
	3 m (**L**)	54
	5 m (**Z**)	85

Dimensions

(mm)

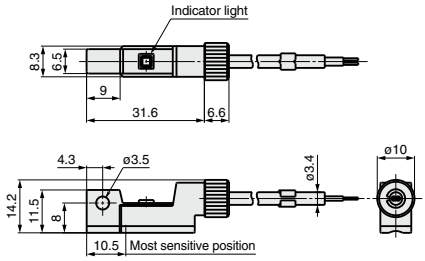

Solid State Auto Switch
Rail Mounting Type
D-F79/D-F7P/D-J79

Refer to SMC website for the details of the products conforming to the international standards.

Grommet

Auto Switch Specifications

PLC: Programmable Logic Controller

D-F7□, D-J79 (With indicator light)			
Auto switch model	**D-F79**	**D-F7P**	**D-J79**
Wiring type	3-wire		2-wire
Output type	NPN	PNP	—
Applicable load	IC circuit, Relay, PLC		24 VDC Relay, PLC
Power supply voltage	5, 12, 24 VDC (4.5 to 28 VDC)		—
Current consumption	10 mA or less		—
Load voltage	28 VDC or less	—	24 VDC (10 to 28 VDC)
Load current	40 mA or less		2.5 to 40 mA
Internal voltage drop	0.8 V or less at 10 mA load current (2 V or less at 40 mA load current)		4 V or less
Leakage current	100 μA or less at 24 VDC		0.8 mA or less at 24 VDC
Indicator light	Red LED illuminates when turned ON.		
Standard	CE/UKCA marking		

Oilproof Heavy-duty Lead Wire Specifications

Auto switch model		**D-F79**	**D-F7P**	**D-J79**
Sheath	Outside diameter [mm]	ø3.4		
Insulator	Number of cores	3 cores (Brown/Blue/Black)		2 cores (Brown/Blue)
	Outside diameter [mm]	ø1.1		
Conductor	Effective area [mm²]	0.2		
	Strand diameter [mm]	ø0.08		
Minimum bending radius [mm] (Reference values)		21		

Note 1) Refer to page 1298 for solid state auto switch common specifications.
Note 2) Refer to page 1298 for lead wire lengths.

Weight

(g)

Auto switch model		**D-F79**	**D-F7P**	**D-J79**
Lead wire length	0.5 m (**Nil**)	13		11
	3 m (**L**)	57		50
	5 m (**Z**)	92		81

Dimensions

(mm)

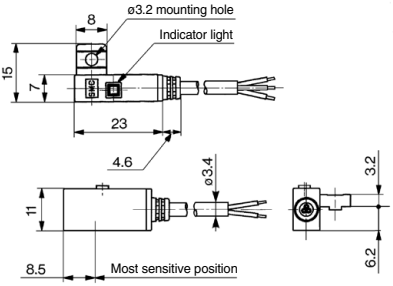

Solid State Auto Switch
Rail Mounting Type
D-F7NV/D-F7PV/D-F7BV

Refer to SMC website for the details of the products conforming to the international standards.

Grommet
Electrical entry: Perpendicular

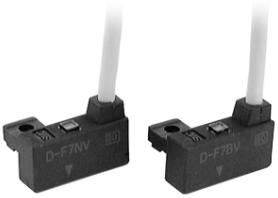

Auto Switch Specifications

PLC: Programmable Logic Controller

D-F7□V (With indicator light)			
Auto switch model	D-F7NV	D-F7PV	D-F7BV
Wiring type	3-wire		2-wire
Output type	NPN	PNP	—
Applicable load	IC circuit, Relay, PLC		24 VDC Relay, PLC
Power supply voltage	5, 12, 24 VDC (4.5 to 28 VDC)		—
Current consumption	10 mA or less		—
Load voltage	28 VDC or less	—	24 VDC (10 to 28 VDC)
Load current	40 mA or less		2.5 to 40 mA
Internal voltage drop	0.8 V or less at 10 mA load current (2 V or less at 40 mA load current)		4 V or less
Leakage current	100 μA or less at 24 VDC		0.8 mA or less at 24 VDC
Indicator light	Red LED illuminates when turned ON.		
Standard	CE/UKCA marking		

Oilproof Heavy-duty Lead Wire Specifications

Auto switch model		D-F7NV	D-F7PV	D-F7BV
Sheath	Outside diameter [mm]	ø3.4		
Insulator	Number of cores	3 cores (Brown/Blue/Black)		2 cores (Brown/Blue)
	Outside diameter [mm]	ø1.1		
Conductor	Effective area [mm²]	0.2		
	Strand diameter [mm]	ø0.08		
Minimum bending radius [mm] (Reference values)		21		

Note 1) Refer to page 1298 for solid state auto switch common specifications.
Note 2) Refer to page 1298 for lead wire lengths.

Weight

(g)

Auto switch model		D-F7NV	D-F7PV	D-F7BV
Lead wire length	0.5 m (**Nil**)	13		11
	3 m (**L**)	57		50
	5 m (**Z**)	92		81

Dimensions

(mm)

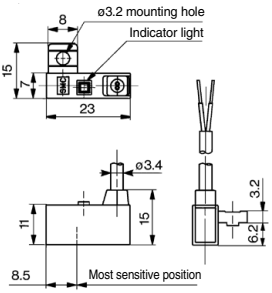

Solid State Auto Switch
Rail Mounting Type
D-J79C

Refer to SMC website for the details of the products conforming to the international standards.

Connector

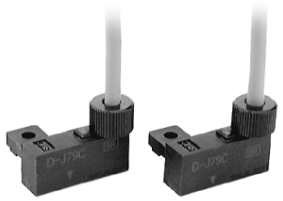

⚠Caution

Precautions

1. Confirm that the connector is appropriately tightened. If tightened insufficiently, the waterproof performance will deteriorate.
2. Refer to page 1385 for the details.

Lead wires with a connector indication

Part No. of Lead Wires with Connectors
(Applicable only for connector type)

Model	Lead wire length
D-LC05	0.5 m
D-LC30	3 m
D-LC50	5 m

Auto Switch Specifications

PLC: Programmable Logic Controller

D-J79C (With indicator light)	
Auto switch model	**D-J79C**
Wiring type	2-wire
Output type	—
Applicable load	24 VDC Relay, PLC
Power supply voltage	—
Current consumption	—
Load voltage	24 VDC (10 to 28 VDC)
Load current	2.5 to 40 mA
Internal voltage drop	4 V or less
Leakage current	0.8 mA or less at 24 VDC
Indicator light	Red LED illuminates when turned ON.
Standard	CE/UKCA marking

Note 1) Refer to page 1298 for solid state auto switch common specifications.
Note 2) Refer to page 1298 for lead wire lengths.
Note 3) Lead wires with a connector may be shipped with auto switches.

Weight

(g)

Auto switch model		D-J79C
Lead wire length	0.5 m (**Nil**)	13
	3 m (**L**)	52
	5 m (**Z**)	83

Dimensions

(mm)

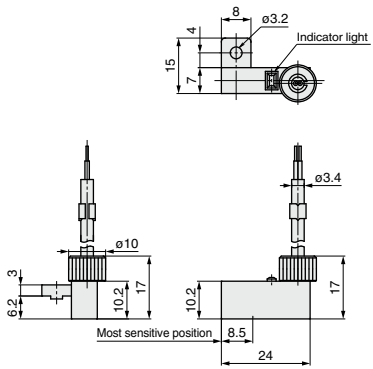

Solid State Auto Switch
Tie-rod Mounting Type
D-F59/D-F5P/D-J59

Refer to SMC website for the details of the products conforming to the international standards.

Grommet

Auto Switch Specifications

PLC: Programmable Logic Controller

D-F5□, D-J59 (With indicator light)			
Auto switch model	D-F59	D-F5P	D-J59
Wiring type	3-wire		2-wire
Output type	NPN	PNP	—
Applicable load	IC circuit, Relay, PLC		24 VDC Relay, PLC
Power supply voltage	5, 12, 24 VDC (4.5 to 28 VDC)		—
Current consumption	10 mA or less		—
Load voltage	28 VDC or less	—	24 VDC (10 to 28 VDC)
Load current	40 mA or less		2.5 to 40 mA
Internal voltage drop	0.8 V or less at 10 mA load current (2 V or less at 40 mA load current)		4 V or less
Leakage current	100 μA or less at 24 VDC		0.8 mA or less at 24 VDC
Indicator light	Red LED illuminates when turned ON.		
Standard	CE/UKCA marking		

Oilproof Heavy-duty Lead Wire Specifications

Auto switch model		D-F59	D-F5P	D-J59
Sheath	Outside diameter [mm]	ø4		
Insulator	Number of cores	3 cores (Brown/Blue/Black)		2 cores (Brown/Blue)
	Outside diameter [mm]	ø1.22		
Conductor	Effective area [mm²]	0.3		
	Strand diameter [mm]	ø0.08		
Minimum bending radius [mm] (Reference values)		24		

Note 1) Refer to page 1298 for solid state auto switch common specifications.
Note 2) Refer to page 1298 for lead wire lengths.

Weight

(g)

Auto switch model		D-F59	D-F5P	D-J59
Lead wire length	0.5 m (**Nil**)	23		21
	3 m (**L**)	81		71
	5 m (**Z**)	127		111

Dimensions

(mm)

D-F59/D-F5P/D-J59

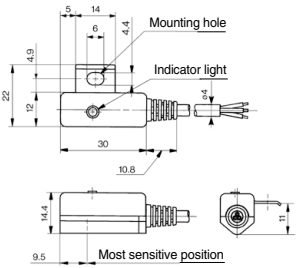

2-Color Indicator Solid State Auto Switch Direct Mounting Type
D-M9NW(V)/D-M9PW(V)/D-M9BW(V)

CE UK CA RoHS

Refer to SMC website for the details of the products conforming to the international standards.

Grommet

- **2-wire load current is reduced (2.5 to 40 mA).**
- **Using flexible cable as standard spec.**
- **The proper operating range can be determined by the color of the light. (Red → Green ← Red)**

⚠Caution

Precautions

Fix the auto switch with the existing screw installed on the auto switch body. The auto switch may be damaged if a screw other than the one supplied is used.

Auto Switch Specifications

PLC: Programmable Logic Controller

D-M9□W, D-M9□WV (With indicator light)						
Auto switch model	D-M9NW	D-M9NWV	D-M9PW	D-M9PWV	D-M9BW	D-M9BWV
Electrical entry direction	In-line	Perpendicular	In-line	Perpendicular	In-line	Perpendicular
Wiring type	3-wire				2-wire	
Output type	NPN		PNP		—	
Applicable load	IC circuit, Relay, PLC				24 VDC relay, PLC	
Power supply voltage	5, 12, 24 VDC (4.5 to 28 V)				—	
Current consumption	10 mA or less				—	
Load voltage	28 VDC or less		—		24 VDC (10 to 28 VDC)	
Load current	40 mA or less				2.5 to 40 mA	
Internal voltage drop	0.8 V or less at 10 mA (2 V or less at 40 mA)				4 V or less	
Leakage current	100 μA or less at 24 VDC				0.8 mA or less	
Indicator light	Operating range ····· Red LED illuminates. Proper operating range ····· Green LED illuminates.					
Standard	CE/UKCA marking					

Oilproof Flexible Heavy-duty Lead Wire Specifications

Auto switch model		D-M9NW(V)	D-M9PW(V)	D-M9BW(V)
Sheath	Outside diameter [mm]	2.6		
Insulator	Number of cores	3 cores (Brown/Blue/Black)		2 cores (Brown/Blue)
	Outside diameter [mm]	0.88		
Conductor	Effective area [mm²]	0.15		
	Strand diameter [mm]	0.05		
Minimum bending radius [mm] (Reference values)		17		

Note 1) Refer to page 1298 for solid state auto switch common specifications.
Note 2) Refer to page 1298 for lead wire lengths.

Weight

(g)

Auto switch model		D-M9NW(V)	D-M9PW(V)	D-M9BW(V)
Lead wire length	0.5 m (**Nil**)	8		7
	1 m (**M**)	14		13
	3 m (**L**)	41		38
	5 m (**Z**)	68		63

Dimensions

(mm)

D-M9□W

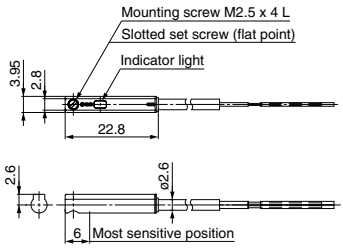

D-M9□WV

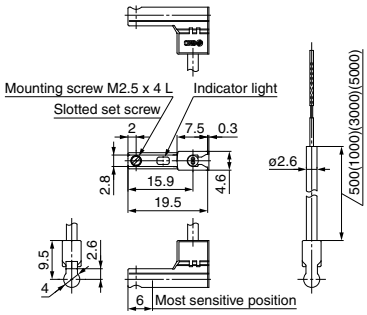

2-Color Indicator Solid State Auto Switch Direct Mounting Type
D-Y7NW(V)/D-Y7PW(V)/D-Y7BW(V)

RoHS

Refer to SMC website for the details of the products conforming to the international standards.

Grommet

- **The proper operating range can be determined by the color of the light. (Red → Green ← Red)**
- **Using flexible cable as standard spec.**

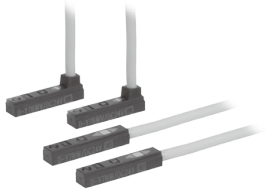

Auto Switch Specifications

PLC: Programmable Logic Controller

D-Y7□W, D-Y7□WV (With indicator light)						
Auto switch model	D-Y7NW	D-Y7NWV	D-Y7PW	D-Y7PWV	D-Y7BW	D-Y7BWV
Electrical entry direction	In-line	Perpendicular	In-line	Perpendicular	In-line	Perpendicular
Wiring type	3-wire				2-wire	
Output type	NPN		PNP		—	
Applicable load	IC circuit, Relay, PLC				24 VDC relay, PLC	
Power supply voltage	5, 12, 24 VDC (4.5 to 28 VDC)				—	
Current consumption	10 mA or less				—	
Load voltage	28 VDC or less		—		24 VDC (10 to 28 VDC)	
Load current	40 mA or less				2.5 to 40 mA	
Internal voltage drop	0.8 V or less at 10 mA load current (2 V or less at 40 mA load current)				4 V or less	
Leakage current	100 μA or less at 24 VDC				0.8 mA or less at 24 VDC	
Indicator light	Operating range ····· Red LED illuminates. Proper operating range ····· Green LED illuminates.					
Standard	CE/UKCA marking					

Oilproof Flexible Heavy-duty Lead Wire Specifications

Auto switch model		D-Y7NW□	D-Y7PW□	D-Y7BW□
Sheath	Outside diameter [mm]	ø3.4		
Insulator	Number of cores	3 cores (Brown/Blue/Black)		2 cores (Brown/Blue)
	Outside diameter [mm]	ø1.0		
Conductor	Effective area [mm²]	0.15		
	Strand diameter [mm]	ø0.05		
Minimum bending radius [mm] (Reference values)		21		

Note 1) Refer to page 1298 for solid state auto switch common specifications.
Note 2) Refer to page 1298 for lead wire lengths.

Weight

(g)

Auto switch model		D-Y7NW(V)	D-Y7PW(V)	D-Y7BW(V)
Lead wire length	0.5 m (**Nil**)	11		
	3 m (**L**)	54		
	5 m (**Z**)	88		

Dimensions

(mm)

D-Y7□W

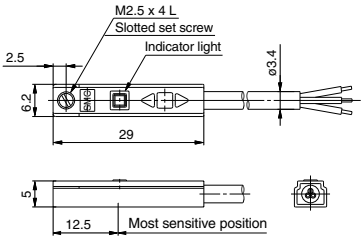

D-Y7□WV

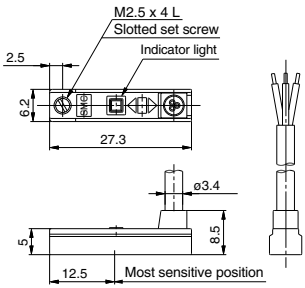

2-Color Indicator Solid State Auto Switch Band Mounting Type
D-H7NW/D-H7PW/D-H7BW

Refer to SMC website for the details of the products conforming to the international standards.

Grommet

The proper operating range can be determined by the color of the light.
(Red → Green ← Red)

Auto Switch Specifications

PLC: Programmable Logic Controller

D-H7□W (With indicator light)			
Auto switch model	D-H7NW	D-H7PW	D-H7BW
Wiring type	3-wire		2-wire
Output type	NPN	PNP	—
Applicable load	IC circuit, Relay, PLC		24 VDC relay, PLC
Power supply voltage	5, 12, 24 VDC (4.5 to 28 VDC)		—
Current consumption	10 mA or less		—
Load voltage	28 VDC or less	—	24 VDC (10 to 28 VDC)
Load current	40 mA or less		2.5 to 40 mA
Internal voltage drop	0.8 V or less at 10 mA load current (2 V or less at 40 mA load current)		4 V or less
Leakage current	100 μA or less at 24 VDC		0.8 mA or less at 24 VDC
Indicator light	Operating range ····· Red LED illuminates. Proper operating range ····· Green LED illuminates.		
Standard	CE/UKCA marking		

Oilproof Heavy-duty Lead Wire Specifications

Auto switch model		D-H7NW	D-H7PW	D-H7BW
Sheath	Outside diameter [mm]	ø3.4		
Insulator	Number of cores	3 cores (Brown/Blue/Black)		2 cores (Brown/Blue)
	Outside diameter [mm]	ø1.1		
Conductor	Effective area [mm²]	0.2		
	Strand diameter [mm]	ø0.08		
Minimum bending radius [mm] (Reference values)		21		

Note 1) Refer to page 1298 for solid state auto switch common specifications.
Note 2) Refer to page 1298 for lead wire lengths.

Weight

(g)

Auto switch model		D-H7NW	D-H7PW	D-H7BW
Lead wire length	0.5 m (**Nil**)	13		11
	3 m (**L**)	57		50
	5 m (**Z**)	92		81

Dimensions

(mm)

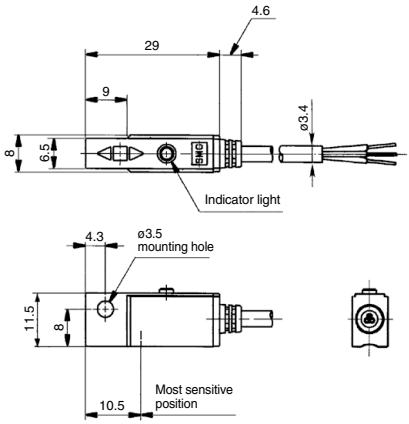

2-Color Indicator Solid State Auto Switch Band Mounting Type
D-G59W/D-G5PW/D-K59W

Refer to SMC website for the details of the products conforming to the international standards.

Grommet

The proper operating range can be determined by the color of the light.
(Red → Green ← Red)

Auto Switch Specifications

PLC: Programmable Logic Controller

D-G5□W, D-K59W (With indicator light)			
Auto switch model	D-G59W	D-G5PW	D-K59W
Wiring type	3-wire		2-wire
Output type	NPN	PNP	—
Applicable load	IC circuit, Relay, PLC		24 VDC Relay, PLC
Power supply voltage	5, 12, 24 VDC (4.5 to 28 VDC)		—
Current consumption	10 mA or less		—
Load voltage	28 VDC or less	—	24 VDC (10 to 28 VDC)
Load current	40 mA or less		2.5 to 40 mA
Internal voltage drop	0.8 V or less at 10 mA load current (2 V or less at 40 mA load current)		4 V or less
Leakage current	100 μA or less at 24 VDC		0.8 mA or less at 24 VDC
Indicator light	Operating range ····· Red LED illuminates. Proper operating range ····· Green LED illuminates.		
Standard	CE/UKCA marking		

Oilproof Heavy-duty Lead Wire Specifications

Auto switch model		D-G59W	D-G5PW	D-K59W
Sheath	Outside diameter [mm]	ø4		
Insulator	Number of cores	3 cores (Brown/Blue/Black)		2 cores (Brown/Blue)
	Outside diameter [mm]	ø1.22		
Conductor	Effective area [mm²]	0.3		
	Strand diameter [mm]	ø0.08		
Minimum bending radius [mm] (Reference values)		24		

Note 1) Refer to page 1298 for solid state auto switch common specifications.
Note 2) Refer to page 1298 for lead wire lengths.

Weight

(g)

Auto switch model		D-G59W	D-G5PW	D-K59W
Lead wire length	0.5 m (**Nil**)	20		18
	3 m (**L**)	78		68
	5 m (**Z**)	124		108

Dimensions

(mm)

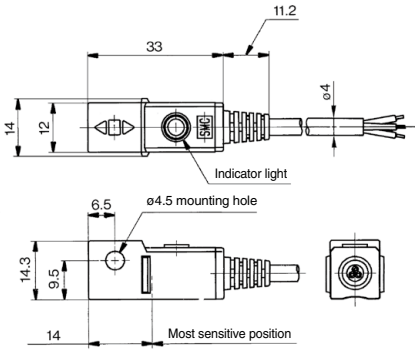

2-Color Indicator Solid State Auto Switch Rail Mounting Type

D-F79W/D-F7PW/D-J79W

Refer to SMC website for the details of the products conforming to the international standards.

Grommet

The proper operating range can be determined by the color of the light.
(Red → Green ← Red)

Auto Switch Specifications

PLC: Programmable Logic Controller

D-F7□W, D-J79W (With indicator light)			
Auto switch model	D-F79W	D-F7PW	D-J79W
Wiring type	3-wire		2-wire
Output type	NPN	PNP	—
Applicable load	IC circuit, Relay, PLC		24 VDC Relay, PLC
Power supply voltage	5, 12, 24 VDC (4.5 to 28 VDC)		—
Current consumption	10 mA or less		—
Load voltage	28 VDC or less	—	24 VDC (10 to 28 VDC)
Load current	40 mA or less		2.5 to 40 mA
Internal voltage drop	0.8 V or less at 10 mA load current (2 V or less at 40 mA load current)		4 V or less
Leakage current	100 μA or less at 24 VDC		0.8 mA or less at 24 VDC
Indicator light	Operating range ····· Red LED illuminates. Proper operating range ····· Green LED illuminates.		
Standard	CE/UKCA marking		

Oilproof Heavy-duty Lead Wire Specifications

Auto switch model		D-F79W	D-F7PW	D-J79W
Sheath	Outside diameter [mm]	ø3.4		
Insulator	Number of cores	3 cores (Brown/Blue/Black)		2 cores (Brown/Blue)
	Outside diameter [mm]	ø1.1		
Conductor	Effective area [mm²]	0.2		
	Strand diameter [mm]	ø0.08		
Minimum bending radius [mm] (Reference values)		21		

Note 1) Refer to page 1298 for solid state auto switch common specifications.
Note 2) Refer to page 1298 for lead wire lengths.

Weight

(g)

Auto switch model		D-F79W	D-F7PW	D-J79W
Lead wire length	0.5 m (**Nil**)	13		11
	3 m (**L**)	57		50
	5 m (**Z**)	92		81

Dimensions

(mm)

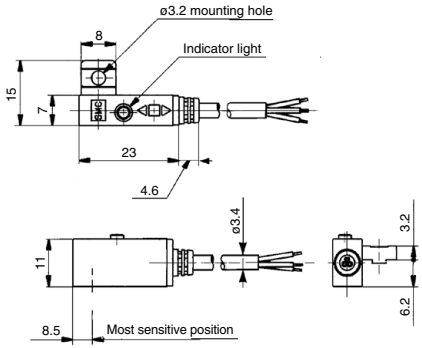

2-Color Indicator Solid State Auto Switch Rail Mounting Type
D-F7NWV/D-F7BWV

CE UK CA RoHS

Refer to SMC website for the details of the products conforming to the international standards.

Grommet
Electrical entry: Perpendicular

The proper operating range can be determined by the color of the light.
(Red → Green ← Red)

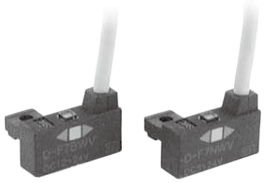

Auto Switch Specifications

PLC: Programmable Logic Controller

D-F7□WV (With indicator light)		
Auto switch model	**D-F7NWV**	**D-F7BWV**
Wiring type	3-wire	2-wire
Output type	NPN	—
Applicable load	IC circuit, Relay, PLC	24 VDC Relay, PLC
Power supply voltage	5, 12, 24 VDC (4.5 to 28 VDC)	—
Current consumption	10 mA or less	—
Load voltage	28 VDC or less	24 VDC (10 to 28 VDC)
Load current	40 mA or less	2.5 to 40 mA
Internal voltage drop	0.8 V or less at 10 mA load current (2 V or less at 40 mA load current)	4 V or less
Leakage current	100 μA or less at 24 VDC	0.8 mA or less at 24 VDC
Indicator light	Operating range ····· Red LED illuminates. Proper operating range ····· Green LED illuminates.	
Standard	CE/UKCA marking	

Oilproof Heavy-duty Lead Wire Specifications

Auto switch model		**D-F7NWV**	**D-F7BWV**
Sheath	Outside diameter [mm]	ø3.4	
Insulator	Number of cores	3 cores (Brown/Blue/Black)	2 cores (Brown/Blue)
	Outside diameter [mm]	ø1.1	
Conductor	Effective area [mm²]	0.2	
	Strand diameter [mm]	ø0.08	
Minimum bending radius [mm] (Reference values)		21	

Note 1) Refer to page 1298 for solid state auto switch common specifications.
Note 2) Refer to page 1298 for lead wire lengths.

Weight

(g)

Auto switch model		**D-F7NWV**	**D-F7BWV**
Lead wire length	0.5 m (**Nil**)	13	11
	3 m (**L**)	57	50
	5 m (**Z**)	92	81

Dimensions

(mm)

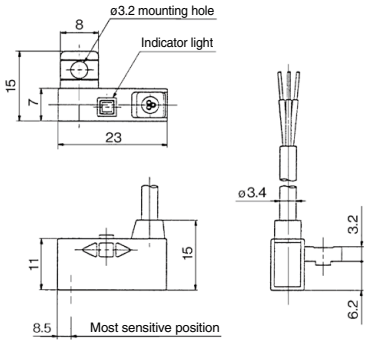

SMC

2-Color Indicator Solid State Auto Switch Tie-rod Mounting Type
D-F59W/D-F5PW/D-J59W

Refer to SMC website for the details of the products conforming to the international standards.

Grommet

The proper operating range can be determined by the color of the light.
(Red → Green ← Red)

Auto Switch Specifications

PLC: Programmable Logic Controller

D-F5□W, D-J59W (With indicator light)			
Auto switch model	D-F59W	D-F5PW	D-J59W
Wiring type	3-wire		2-wire
Output type	NPN	PNP	—
Applicable load	IC circuit, Relay, PLC		24 VDC Relay, PLC
Power supply voltage	5, 12, 24 VDC (4.5 to 28 VDC)		—
Current consumption	10 mA or less		—
Load voltage	28 VDC or less	—	24 VDC (10 to 28 VDC)
Load current	40 mA or less		2.5 to 40 mA
Internal voltage drop	0.8 V or less at 10 mA load current (2 V or less at 40 mA load current)		4 V or less
Leakage current	100 μA or less at 24 VDC		0.8 mA or less at 24 VDC
Indicator light	Operating range ····· Red LED illuminates. Proper operating range ····· Green LED illuminates.		
Standard	CE/UKCA marking		

Oilproof Heavy-duty Lead Wire Specifications

Auto switch model		D-F59W	D-F5PW	D-J59W
Sheath	Outside diameter [mm]	ø4		
Insulator	Number of cores	3 cores (Brown/Blue/Black)		2 cores (Brown/Blue)
	Outside diameter [mm]	ø1.22		
Conductor	Effective area [mm²]	0.3		
	Strand diameter [mm]	ø0.08		
Minimum bending radius [mm] (Reference values)		24		

Note 1) Refer to page 1298 for solid state auto switch common specifications.
Note 2) Refer to page 1298 for lead wire lengths.

Weight

(g)

Auto switch model		D-F59W	D-F5PW	D-J59W
Lead wire length	0.5 m (**Nil**)	23		21
	3 m (**L**)	81		71
	5 m (**Z**)	127		111

Dimensions

(mm)

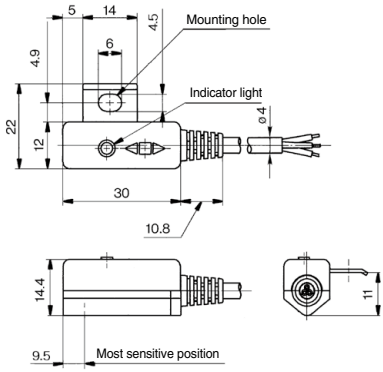

2-Color Indicator with Diagnostic Output Solid State Auto Switch: Band Mounting Type
D-H7NF

Refer to SMC website for the details of the products conforming to the international standards.

Grommet

Since the diagnostic output signal can be detected in the red display area, the difference of detecting position can be confirmed by the side of PLC (Programmable Logic Controller).

Auto Switch Specifications

PLC: Programmable Logic Controller

D-H7NF (With indicator light)	
Auto switch model	**D-H7NF**
Wiring type	4-wire
Output type	NPN
Diagnostic output	Normal operation
Applicable load	IC circuit, Relay, PLC
Power voltage	5, 12, 24 VDC (4.5 to 28 VDC)
Current consumption	10 mA or less
Load voltage	28 VDC or less
Load current	50 mA or less at the total amount of normal output and diagnostic output
Internal voltage drop	1.5 V or less (0.8 V or less at each output 5 mA)
Current leakage	100 μA or less at 24 VDC
Indicator light	Operating range ····· Red LED illuminates. Proper operating range ····· Green LED illuminates.
Standard	CE/UKCA marking

Oilproof Heavy-duty Lead Wire Specifications

Auto switch model		**D-H7NF**
Sheath	Outside diameter [mm]	ø3.4
Insulator	Number of cores	4 cores (Brown/Blue/Black/Orange)
	Outside diameter [mm]	ø0.98
Conductor	Effective area [mm²]	0.2
	Strand diameter [mm]	ø0.08
Minimum bending radius [mm] (Reference values)		21

Note 1) Refer to page 1298 for solid state auto switch common specifications.
Note 2) Refer to page 1298 for lead wire lengths.

Weight

(g)

Auto switch model		**D-H7NF**
Lead wire length	0.5 m (**Nil**)	13
	3 m (**L**)	56
	5 m (**Z**)	90

Diagnostic Output Operation

The diagnostic output signal is output within the red display area (where indicator light is Red), and the diagnostic output becomes OFF when the detecting position remains within the proper operating range (where indicator is Green). When the detecting position is not adjusted, the diagnostic output becomes ON.

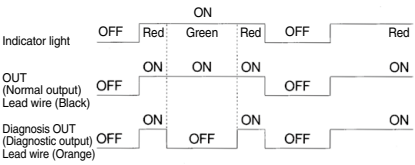

Dimensions

(mm)

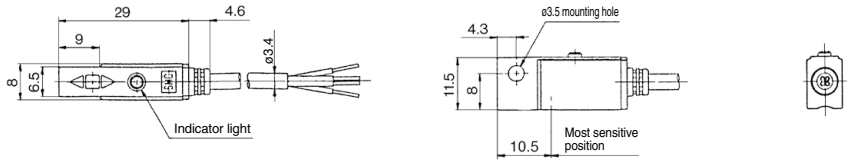

2-Color Indicator with Diagnostic Output Solid State Auto Switch: Band Mounting Type

D-G59F

Refer to SMC website for the details of the products conforming to the international standards.

Grommet

Since the diagnostic output signal can be detected in the red display area, the difference of detecting position can be confirmed by the side of PLC (Programmable Logic Controller).

Auto Switch Specifications

PLC: Programmable Logic Controller

D-G59F (With indicator light)	
Auto switch model	**D-G59F**
Wiring type	4-wire
Output type	NPN
Diagnostic output	Normal operation
Applicable load	IC circuit, Relay, PLC
Power voltage	5, 12, 24 VDC (4.5 to 28 VDC)
Current consumption	10 mA or less
Load voltage	28 VDC or less
Load current	50 mA or less at the total amount of normal output and diagnostic output
Internal voltage drop	1.5 V or less (0.8 V or less at 5 mA)
Current leakage	100 μA or less at 24 VDC
Indicator light	Operating range ····· Red LED illuminates. Proper operating range ····· Green LED illuminates.
Standard	CE/UKCA marking

Oilproof Heavy-duty Lead Wire Specifications

Auto switch model		**D-G59F**
Sheath	Outside diameter [mm]	ø4
Insulator	Number of cores	4 cores (Brown/Blue/Black/Orange)
	Outside diameter [mm]	ø1.29
Conductor	Effective area [mm²]	0.3
	Strand diameter [mm]	ø0.08
Minimum bending radius [mm] (Reference values)		24

Note 1) Refer to page 1298 for solid state auto switch common specifications.
Note 2) Refer to page 1298 for lead wire lengths.

Weight

(g)

Auto switch model		**D-G59F**
Lead wire length	0.5 m (**Nil**)	20
	3 m (**L**)	74
	5 m (**Z**)	117

Diagnostic Output Operation

The diagnostic output signal is output within the red display area (where indicator light is Red), and the diagnostic output becomes OFF when the detecting position remains within the proper operating range (where indicator is Green). When the detecting position is not adjusted, the diagnostic output becomes ON.

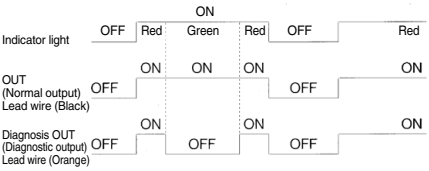

Dimensions

(mm)

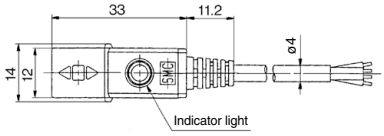

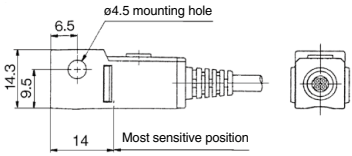

2-Color Indicator with Diagnostic Output Solid State Auto Switch: Rail Mounting Type
D-F79F

Refer to SMC website for the details of the products conforming to the international standards.

Grommet

Since the diagnostic output signal can be detected in the red display area, the difference of detecting position can be confirmed by the side of PLC (Programmable Logic Controller).

Auto Switch Specifications

PLC: Programmable Logic Controller

D-F79F (With indicator light)	
Auto switch model	**D-F79F**
Wiring type	4-wire
Output type	NPN
Diagnostic output	Normal operation
Applicable load	IC circuit, Relay, PLC
Power supply voltage	5, 12, 24 VDC (4.5 to 28 VDC)
Current consumption	10 mA or less
Load voltage	28 VDC or less
Load current	50 mA or less at the total amount of normal output and diagnostic output
Internal voltage drop	1.5 V or less (0.8 V or less at 5 mA)
Leakage current	100 μA or less at 24 VDC
Indicator light	Operating range ····· Red LED illuminates. Proper operating range ····· Green LED illuminates.
Standard	CE/UKCA marking

Oilproof Heavy-duty Lead Wire Specifications

Auto switch model		**D-F79F**
Sheath	Outside diameter [mm]	ø3.4
Insulator	Number of cores	4 cores (Brown/Blue/Black/Orange)
	Outside diameter [mm]	ø0.98
Conductor	Effective area [mm²]	0.2
	Strand diameter [mm]	ø0.08
Minimum bending radius [mm] (Reference values)		21

Note 1) Refer to page 1298 for solid state auto switch common specifications.
Note 2) Refer to page 1298 for lead wire lengths.

Weight

(g)

Auto switch model		**D-F79F**
Lead wire length	0.5 m (**Nil**)	13
	3 m (**L**)	56
	5 m (**Z**)	90

Diagnostic Output Operation

The diagnostic output signal is output within the red display area (where indicator light is Red), and it is not output within the proper operating range (where indicator light is Green). When the auto switch detecting position is not adjusted, the diagnostic output becomes activated.

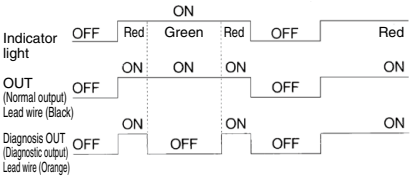

Dimensions

(mm)

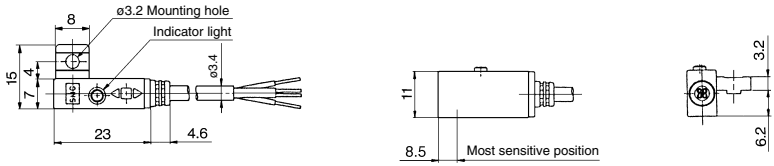

2-Color Indicator with Diagnostic Output Solid State Auto Switch: Tie-rod Mounting Type

D-F59F

Refer to SMC website for the details of the products conforming to the international standards.

Grommet

Since the diagnostic output signal can be detected in the red display area, the difference of detecting position can be confirmed by the side of PLC (Programmable Logic Controller).

Auto Switch Specifications

PLC: Programmable Logic Controller

D-F59F (With indicator light)	
Auto switch model	**D-F59F**
Wiring type	4-wire
Output type	NPN
Diagnostic output	Normal operation
Applicable load	IC circuit, Relay, PLC
Power supply voltage	5, 12, 24 VDC (4.5 to 28 VDC)
Current consumption	10 mA or less
Load voltage	28 VDC or less
Load current	50 mA or less at the total amount of normal output and diagnostic output
Internal voltage drop	1.5 V or less (0.8 V or less at 5 mA)
Leakage current	100 μA or less at 28 VDC
Indicator light	Operating range ····· Red LED illuminates. Proper operating range ····· Green LED illuminates.
Standard	CE/UKCA marking

Oilproof Heavy-duty Lead Wire Specifications

Auto switch model		**D-F59F**
Sheath	Outside diameter [mm]	ø4
Insulator	Number of cores	4 cores (Brown/Blue/Black/Orange)
	Outside diameter [mm]	ø1.29
Conductor	Effective area [mm²]	0.3
	Strand diameter [mm]	ø0.08
Minimum bending radius [mm] (Reference values)		24

Note 1) Refer to page 1298 for solid state auto switch common specifications.
Note 2) Refer to page 1298 for lead wire lengths.

Weight

(g)

Auto switch model		**D-F59F**
Lead wire length	0.5 m (**Nil**)	22
	3 m (**L**)	77
	5 m (**Z**)	121

Diagnostic Output Operation

The diagnostic output signal is output within the red display area (where indicator light is Red), and it is not output within the proper operating range (where indicator light is Green). When the auto switch detecting position is not adjusted, the diagnostic output becomes activated.

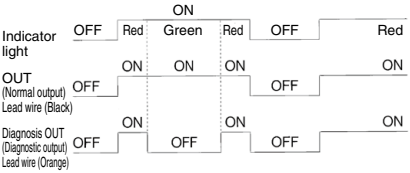

Dimensions

(mm)

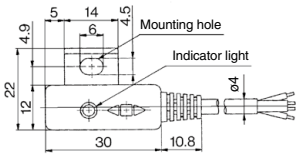

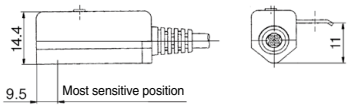

Water Resistant 2-Color Indicator Solid State Auto Switch: Direct Mounting Type
D-M9NA(V)/D-M9PA(V)/D-M9BA(V)

CE UKCA RoHS

Grommet

- **Water (coolant) resistant type**
- **2-wire load current is reduced (2.5 to 40 mA).**
- **The proper operating range can be determined by the color of the light. (Red → Green ← Red)**
- **Using flexible cable as standard spec.**

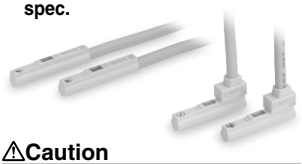

⚠Caution

Precautions

Fix the auto switch with the existing screw installed on the auto switch body. The auto switch may be damaged if a screw other than the one supplied is used.
Please consult with SMC if using coolant liquid other than water based solution.

Weight

(g)

Auto switch model		D-M9NA(V)	D-M9PA(V)	D-M9BA(V)
Lead wire length	0.5 m (**Nil**)	8		7
	1 m (**M**)	14		13
	3 m (**L**)	41		38
	5 m (**Z**)	68		63

Auto Switch Specifications

PLC: Programmable Logic Controller

D-M9□A, D-M9□AV (With indicator light)						
Auto switch model	D-M9NA	D-M9NAV	D-M9PA	D-M9PAV	D-M9BA	D-M9BAV
Electrical entry direction	In-line	Perpendicular	In-line	Perpendicular	In-line	Perpendicular
Wiring type	3-wire				2-wire	
Output type	NPN		PNP		—	
Applicable load	IC circuit, Relay, PLC				24 VDC relay, PLC	
Power supply voltage	5, 12, 24 VDC (4.5 to 28 V)				—	
Current consumption	10 mA or less				—	
Load voltage	28 VDC or less		—		24 VDC (10 to 28 VDC)	
Load current	40 mA or less				2.5 to 40 mA	
Internal voltage drop	0.8 V or less at 10 mA (2 V or less at 40 mA)				4 V or less	
Leakage current	100 μA or less at 24 VDC				0.8 mA or less	
Indicator light	Operating range ····· Red LED illuminates. Proper operating range ····· Green LED illuminates.					
Standard	CE/UKCA marking					

Oilproof Flexible Heavy-duty Lead Wire Specifications

Auto switch model		D-M9NA□	D-M9NAV□	D-M9PA□	D-M9PAV□	D-M9BA□	D-M9BAV□
Sheath	Outside diameter [mm]	2.6					
Insulator	Number of cores	3 cores (Brown/Blue/Black)				2 cores (Brown/Blue)	
	Outside diameter [mm]	0.88					
Conductor	Effective area [mm²]	0.15					
	Strand diameter [mm]	0.05					
Minimum bending radius [mm]		17					

Note 1) Refer to page 1298 for solid state auto switch common specifications.
Note 2) Refer to page 1298 for lead wire lengths.

Dimensions

(mm)

D-M9□A

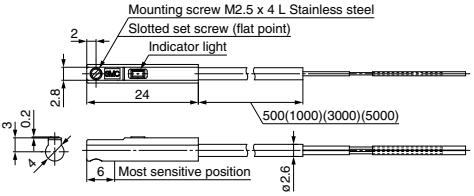

D-M9□AV

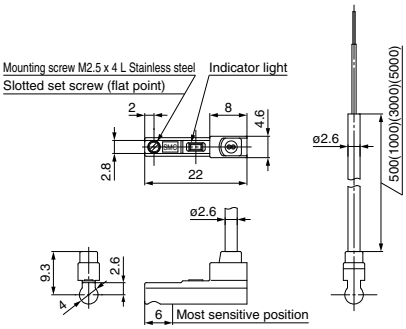

SMC

Water Resistant 2-Color Indicator Solid State Auto Switch: Direct Mounting Type

D-Y7BA

Refer to SMC website for the details of the products conforming to the international standards.

Grommet

- **Water (coolant) resistant type**
- **Using flexible cable as standard spec.**
- **The proper operating range can be determined by the color of the light. (Red → Green ← Red)**

⚠Caution

Precautions

Please consult with SMC if using coolant liquid other than water based solution.
Detection characteristics (operating range) are the same as D-Y5□ and D-Y7□W, but the detection area length is different.

Auto Switch Specifications

PLC: Programmable Logic Controller

D-Y7BA (With indicator light)	
Auto switch model	**D-Y7BA**
Wiring type	2-wire
Applicable load	24 VDC Relay, PLC
Load voltage	24 VDC (10 to 28 VDC)
Load current	2.5 to 40 mA
Internal voltage drop	4 V or less
Leakage current	0.8 mA or less at 24 VDC
Indicator light	Operating range ····· Red LED illuminates. Proper operating range ····· Green LED illuminates.
Standard	CE/UKCA marking

Oilproof Flexible Heavy-duty Lead Wire Specifications

Auto switch model		**D-Y7BA**
Sheath	Outside diameter [mm]	ø3.4
Insulator	Number of cores	2 cores (Brown/Blue)
	Outside diameter [mm]	ø1
Conductor	Effective area [mm²]	0.15
	Strand diameter [mm]	ø0.05
Minimum bending radius [mm] (Reference values)		21

Note 1) Refer to page 1298 for solid state auto switch common specifications.
Note 2) Refer to page 1298 for lead wire lengths.

Weight

(g)

Auto switch model		**D-Y7BA**
Lead wire length	3 m (**L**)	54
	5 m (**Z**)	88

Dimensions

(mm)

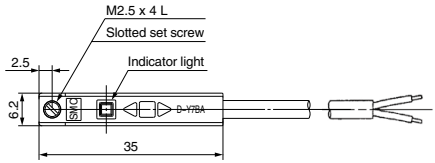

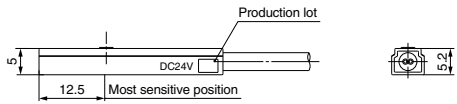

Water Resistant 2-Color Indicator Solid State Auto Switch: Band Mounting Type

D-H7BA

Refer to SMC website for the details of the products conforming to the international standards.

Grommet

- **Water (coolant) resistant type**
- **The proper operating range can be determined by the color of the light. (Red → Green ← Red)**

⚠Caution

Precautions

Please consult with SMC if using coolant liquid other than water based solution.

Auto Switch Specifications

PLC: Programmable Logic Controller

D-H7BA (With indicator light)	
Auto switch model	**D-H7BA**
Wiring type	2-wire
Output type	—
Applicable load	24 VDC Relay, PLC
Power supply voltage	—
Current consumption	—
Load voltage	24 VDC (10 to 28 VDC)
Load current	2.5 to 40 mA
Internal voltage drop	4 V or less
Leakage current	0.8 mA or less at 24 VDC
Indicator light	Operating range ····· Red LED illuminates. Proper operating range ····· Green LED illuminates.
Standard	CE/UKCA marking

Oilproof Heavy-duty Lead Wire Specifications

Auto switch model		**D-H7BA**
Sheath	Outside diameter [mm]	ø3.4
Insulator	Number of cores	2 cores (Brown/Blue)
	Outside diameter [mm]	ø1.1
Conductor	Effective area [mm²]	0.2
	Strand diameter [mm]	ø0.08
Minimum bending radius [mm] (Reference values)		21

Note 1) Refer to page 1298 for solid state auto switch common specifications.
Note 2) Refer to page 1298 for lead wire lengths.

Weight

(g)

Auto switch model		**D-H7BA**
Lead wire length	3 m (**L**)	50
	5 m (**Z**)	81

Dimensions

(mm)

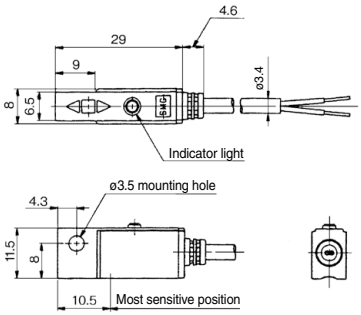

Water Resistant 2-Color Indicator Solid State Auto Switch: Band Mounting Type

D-G5BA

Refer to SMC website for the details of the products conforming to the international standards.

Grommet

- **Water (coolant) resistant type**
- **The proper operating range can be determined by the color of the light. (Red → Green ← Red)**

⚠Caution

Precautions

Please consult with SMC if using coolant liquid other than water based solution.

Auto Switch Specifications

PLC: Programmable Logic Controller

D-G5BA (With indicator light)	
Auto switch model	**D-G5BA**
Wiring type	2-wire
Output type	—
Applicable load	24 VDC Relay, PLC
Power supply voltage	—
Current consumption	—
Load voltage	24 VDC (10 to 28 VDC)
Load current	2.5 to 40 mA
Internal voltage drop	4 V or less
Leakage current	0.8 mA or less at 24 VDC
Indicator light	Operating range ····· Red LED illuminates. Proper operating range ····· Green LED illuminates.
Standard	CE/UKCA marking

Oilproof Heavy-duty Lead Wire Specifications

Auto switch model		**D-G5BA**
Sheath	Outside diameter [mm]	ø4
Insulator	Number of cores	2 cores (Brown/Blue)
	Outside diameter [mm]	ø1.22
Conductor	Effective area [mm²]	0.3
	Strand diameter [mm]	ø0.08
Minimum bending radius [mm] (Reference values)		24

Note 1) Refer to page 1298 for solid state auto switch common specifications.
Note 2) Refer to page 1298 for lead wire lengths.

Weight

(g)

Auto switch model		**D-G5BA**
Lead wire length	3 m (**L**)	68
	5 m (**Z**)	108

Dimensions

(mm)

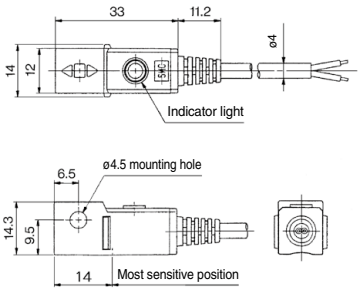

Water Resistant 2-Color Indicator Solid State Auto Switch: Rail Mounting Type

D-F7BA(V)

Refer to SMC website for the details of the products conforming to the international standards.

Grommet

- **Water (coolant) resistant type**
- **The proper operating range can be determined by the color of the light. (Red → Green ← Red)**

⚠Caution

Precautions

Please consult with SMC if using coolant liquid other than water based solution.

Auto Switch Specifications

PLC: Programmable Logic Controller

D-F7BA(V) (With indicator light)		
Auto switch model	**D-F7BA**	**D-F7BAV**
Electrical entry direction	In-line	Perpendicular
Wiring type	2-wire	
Output type	—	
Applicable load	24 VDC Relay, PLC	
Power supply voltage	—	
Current consumption	—	
Load voltage	24 VDC (10 to 28 VDC)	
Load current	2.5 to 40 mA	
Internal voltage drop	4 V or less	
Leakage current	0.8 mA or less at 24 VDC	
Indicator light	Operating range ····· Red LED illuminates. Proper operating range ····· Green LED illuminates.	
Standard	CE/UKCA marking	

Oilproof Heavy-duty Lead Wire Specifications

Auto switch model		**D-F7BA**
Sheath	Outside diameter [mm]	ø3.4
Insulator	Number of cores	2 cores (Brown/Blue)
	Outside diameter [mm]	ø1.1
Conductor	Effective area [mm²]	0.2
	Strand diameter [mm]	ø0.08
Minimum bending radius [mm] (Reference values)		21

Note 1) Refer to page 1298 for solid state auto switch common specifications.
Note 2) Refer to page 1298 for lead wire lengths.

Weight

(g)

Auto switch model		**D-F7BA**	**D-F7BAV**
Lead wire length	3 m (**L**)	50	
	5 m (**Z**)	81	

Dimensions

(mm)

D-F7BA

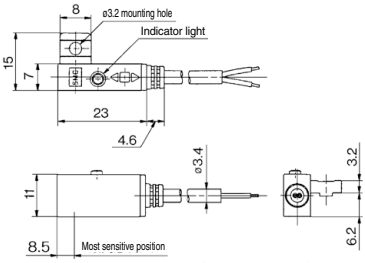

D-F7BAV

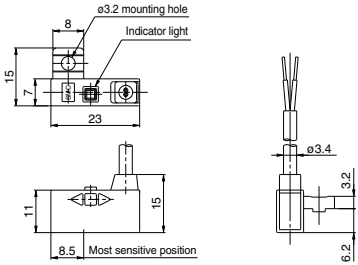

Water Resistant 2-Color Indicator
Solid State Auto Switch: Tie-rod Mounting Type
D-F5BA

Refer to SMC website for the details of the products conforming to the international standards.

Grommet

- **Water (coolant) resistant type**
- **The proper operating range can be determined by the color of the light. (Red → Green ← Red)**

⚠Caution

Precautions

Please consult with SMC if using coolant liquid other than water based solution.

Auto Switch Specifications

PLC: Programmable Logic Controller

D-F5BA (With indicator light)	
Auto switch model	**D-F5BA**
Wiring type	2-wire
Output type	—
Applicable load	24 VDC Relay, PLC
Power supply voltage	—
Current consumption	—
Load voltage	24 VDC (10 to 28 VDC)
Load current	2.5 to 40 mA
Internal voltage drop	4 V or less
Leakage current	0.8 mA or less at 24 VDC
Indicator light	Operating range ..... Red LED illuminates. Proper operating range ..... Green LED illuminates.
Standard	CE/UKCA marking

Oilproof Heavy-duty Lead Wire Specifications

Auto switch model		**D-F5BA**
Sheath	Outside diameter [mm]	ø4
Insulator	Number of cores	2 cores (Brown/Blue)
	Outside diameter [mm]	ø1.22
Conductor	Effective area [mm²]	0.3
	Strand diameter [mm]	ø0.08
Minimum bending radius [mm] (Reference values)		24

Note 1) Refer to page 1298 for solid state auto switch common specifications.
Note 2) Refer to page 1298 for lead wire lengths.

Weight

(g)

Auto switch model		**D-F5BA**
Lead wire length	3 m (**L**)	71
	5 m (**Z**)	111

Dimensions

(mm)

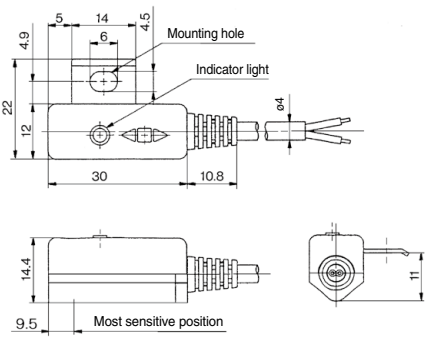

For Hygienic Design Cylinders
Solid State Auto Switch: Direct Mounting Type
D-F6N/D-F6P/D-F6B

Grommet

- **2-wire load current is reduced (2.5 to 40 mA)**
- **Using flexible cable as standard spec.**

⚠Caution

Precautions

Fix the auto switch with the existing screw installed on the auto switch body.
The auto switch may be damaged if a screw other than the one supplied is used.

Auto Switch Specifications

PLC: Programmable Logic Controller

D-F6□ (With indicator light)			
Auto switch part no.	**D-F6N**	**D-F6P**	**D-F6B**
Electrical entry direction	In-line		
Wiring type	3-wire		2-wire
Output type	NPN	PNP	—
Applicable load	IC circuit, relay, and PLC		24 VDC relay, PLC
Power supply voltage	5, 12, 24 VDC (4.5 to 28 V)		—
Current consumption	10 mA or less		—
Load voltage	28 VDC or less	—	24 VDC (10 to 28 VDC)
Load current	40 mA or less		2.5 to 40 mA
Internal voltage drop	0.8 V or less at 10 mA (2V or less at 40 mA)		4 V or less
Leakage current	100 μA or less at 24 V DC		0.8 mA or less
Indicator light	Red LED illuminates when turned ON.		
Standard	CE/UKCA marking		

Oilproof Flexible Heavy-duty Lead Wire Specifications

Auto switch model		**D-F6N□**	**D-F6P□**	**D-F6B□**
Sheath	Outside diameter [mm]	ø2.6		
Insulator	Number of cores	3 cores (Brown/Blue/Black)		2 cores (Brown/Blue)
	Outside diameter [mm]	ø0.88		
Conductor	Effective area [mm²]	0.15		
	Strand diameter [mm]	ø0.05		
Minimum bending radius [mm] (Reference values)		17		

Note 1) Refer to page 1298 for solid state auto switch common specifications.
Note 2) Refer to page 1298 for lead wire lengths.

Weight

(g)

Auto switch model		**D-F6N**	**D-F6P**	**D-F6B**
Lead wire length	0.5 m (**Nil**)	20		19
	3 m (**L**)	53		50
	5 m (**Z**)	80		75

Dimensions

(mm)

D-F6□

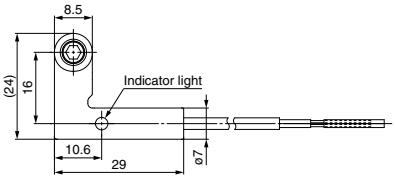

D-F6B

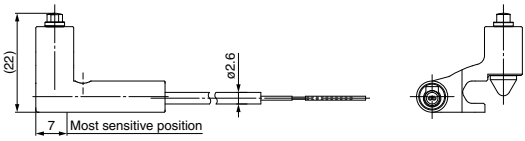

D-F6N/F6P

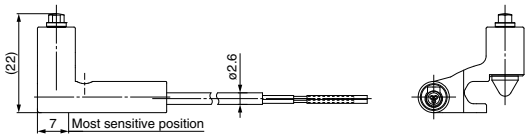

Solid State Auto Switch with Timer
Band Mounting Type
D-G5NT

Refer to SMC website for the details of the products conforming to the international standards.

Grommet

- **With built-in OFF-delay timer (approx. 200 ms)**
- **Easy intermediate detection**

Auto Switch Specifications

PLC: Programmable Logic Controller

D-G5NT (With indicator light)	
Auto switch model	**D-G5NT**
Wiring type	3-wire
Output type	NPN
Output operation	Off-delay
Operating time	1 ms or less
Off-delay time	200 ± 50 ms
Applicable load	IC circuit, Relay, PLC
Power supply voltage	5, 12, 24 VDC (4.5 to 28 VDC)
Current consumption	10 mA or less
Load voltage	28 VDC or less
Load current	40 mA or less
Internal voltage drop	1.5 V or less (0.8 V or less at 10 mA)
Leakage current	100 μA or less at 24 VDC
Indicator light	Red LED illuminates when turned ON.
Standard	CE/UKCA marking

Oilproof Heavy-duty Lead Wire Specifications

Auto switch model		**D-G5NT**
Sheath	Outside diameter [mm]	ø4
Insulator	Number of cores	3 cores (Brown/Blue/Black)
	Outside diameter [mm]	ø1.22
Conductor	Effective area [mm²]	0.3
	Strand diameter [mm]	ø0.08
Minimum bending radius [mm] (Reference values)		24

Note 1) Refer to page 1298 for solid state auto switch common specifications.
Note 2) Refer to page 1298 for lead wire lengths.

Weight

(g)

Auto switch model		**D-G5NT**
Lead wire length	3 m (**L**)	78
	5 m (**Z**)	124

Timer Operation

Detection of intermediate positioning for high-speed cylinder

Detecting point dispersion occurs due to response time of PLC (sequencer); e.g. scanning.

Ex.) Cylinder speed — 1000 mm/sec.
PLC response time — 0.1 sec.
Detecting point dispersion — Within 100 mm (= 1000 mm/sec. x 0.1 sec.)

Take PLC response time into consideration when using.

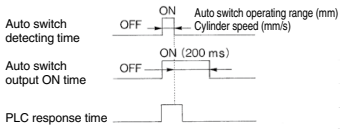

Dimensions

(mm)

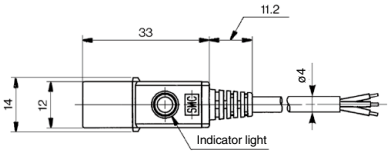

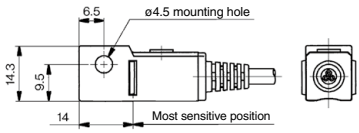

Solid State Auto Switch with Timer
Rail Mounting Type
D-F7NT

Refer to SMC website for the details of the products conforming to the international standards.

Grommet

- **With built-in OFF-delay timer (approx. 200 ms)**
- **Easy intermediate detection**

Auto Switch Specifications

PLC: Programmable Logic Controller

D-F7NT (With indicator light)	
Auto switch model	**D-F7NT**
Wiring type	3-wire
Output type	NPN
Output operation	Off-delay
Operating time	1 ms or less
Off-delay time	200 ± 50 ms
Applicable load	IC circuit, Relay, PLC
Power supply voltage	5, 12, 24 VDC (4.5 to 28 VDC)
Current consumption	10 mA or less
Load voltage	28 VDC or less
Load current	40 mA or less
Internal voltage drop	1.5 V or less (0.8 V or less at 10 mA)
Leakage current	100 μA or less at 24 VDC
Indicator light	Red LED illuminates when turned ON.
Standard	CE/UKCA marking

Oilproof Heavy-duty Lead Wire Specifications

Auto switch model		**D-F7NT**
Sheath	Outside diameter [mm]	ø3.4
Insulator	Number of cores	3 cores (Brown/Blue/Black)
	Outside diameter [mm]	ø1.1
Conductor	Effective area [mm²]	0.2
	Strand diameter [mm]	ø0.08
Minimum bending radius [mm] (Reference values)		21

Note 1) Refer to page 1298 for solid state auto switch common specifications.
Note 2) Refer to page 1298 for lead wire lengths.

Weight

(g)

Auto switch model		**D-F7NT**
Lead wire length	3 m (**L**)	57
	5 m (**Z**)	92

Timer Operation

Detection of intermediate positioning for high-speed cylinder

Detecting point dispersion occurs due to response time of PLC (sequencer); e.g. scanning.

Ex.) Cylinder speed — 1000 mm/sec.
PLC response time — 0.1 sec.
Detecting point dispersion — Within 100 mm (= 1000 mm/sec. x 0.1 sec.)

Take PLC response time into consideration when using.

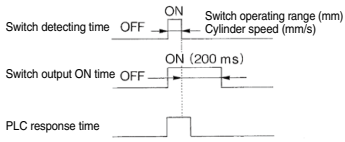

Dimensions

(mm)

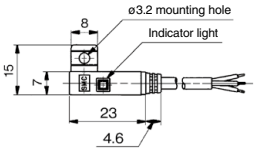

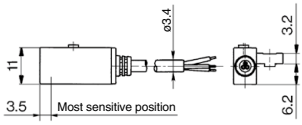

Solid State Auto Switch with Timer
Tie-rod Mounting Type
D-F5NT

Refer to SMC website for the details of the products conforming to the international standards.

Grommet

- **With built-in OFF-delay timer (approx. 200 ms)**
- **Easy intermediate detection**

Auto Switch Specifications

PLC: Programmable Logic Controller

D-F5NT (With indicator light)	
Auto switch model	**D-F5NT**
Wiring type	3-wire
Output type	NPN
Output operation	Off-delay
Operating time	1 ms or less
Off-delay time	200 ± 50 ms
Applicable load	IC circuit, Relay, PLC
Power supply voltage	5, 12, 24 VDC (4.5 to 28 VDC)
Current consumption	10 mA or less
Load voltage	28 VDC or less
Load current	40 mA or less
Internal voltage drop	1.5 V or less (0.8 V or less at 10 mA)
Leakage current	100 μA or less at 24 VDC
Indicator light	Red LED illuminates when turned ON.
Standard	CE/UKCA marking

Oilproof Heavy-duty Lead Wire Specifications

Auto switch model		**D-F5NT**
Sheath	Outside diameter [mm]	ø4
Insulator	Number of cores	3 cores (Brown/Blue/Black)
	Outside diameter [mm]	ø1.22
Conductor	Effective area [mm²]	0.3
	Strand diameter [mm]	ø0.08
Minimum bending radius [mm] (Reference values)		24

Note 1) Refer to page 1298 for solid state auto switch common specifications.
Note 2) Refer to page 1298 for lead wire lengths.

Timer Operation

Detection of intermediate positioning for high-speed cylinder

Detecting point dispersion occurs due to response time of PLC (sequencer); e.g. scanning.

Ex.) Cylinder speed — 1000 mm/sec.
PLC response time — 0.1 sec.
Detecting point dispersion — Within 100 mm (= 1000 mm/sec. x 0.1 sec.)

Take PLC response time into consideration when using.

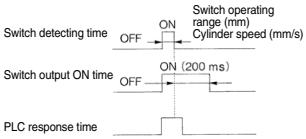

Weight

(g)

Auto switch model		**D-F5NT**
Lead wire length	3 m (**L**)	81
	5 m (**Z**)	127

Dimensions

(mm)

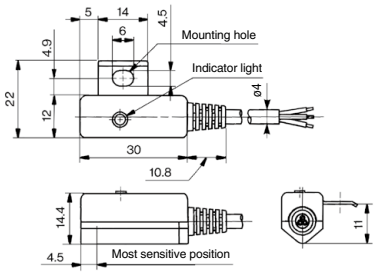

Magnetic Field Resistant 2-Color Indicator Solid State Auto Switch
D-P3DWASC/D-P3DWASE
(Electrical Entry: Pre-wired connector)

Refer to SMC website for the details of the products conforming to the international standards.

- **It is possible to use in an environment which generates a magnetic field disturbance (AC magnetic field).**
- **The proper operating range can be determined by the color of the light. (Red → Green ← Red)**

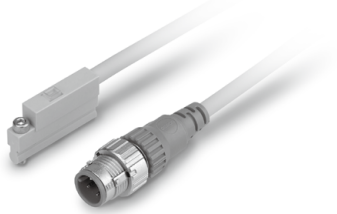

⚠Caution

Precautions

For single-phase AC welding machines.
If it is used for current inverter welders (including rectifying type) and condenser type welders, the magnetic field resistance is reduced. Please contact SMC regarding the performance.

Magnetic Field Resistance

If the current of the AC welding machine is 16000 A or lower, the auto switch can be used, even if the distance between the welding conductor (gun cable) and the cylinder/actuator or auto switch is 0 mm.
Please contact SMC when the AC welding current exceeds 16000 A.

Weight (g)

Auto switch model		D-P3DWASC	D-P3DWASE
Lead wire length (m)	0.3	25	

Connector pin

Model	Connector pin and wiring			
	1	2	3	4
D-P3DWASC	—	—	OUT(∓)	OUT(±)
D-P3DWASE	OUT(±)	—	—	OUT(∓)

Auto Switch Specifications

PLC: Programmable Logic Controller

D-P3DWASC/E (With indicator light)		
Auto switch model	D-P3DWASC	D-P3DWASE
Applicable load	24 VDC relay, PLC	
Load voltage	24 VDC	
Load current	6 to 40 mA	
Internal voltage drop	5 V or less	
Leakage current	1 mA or less at 24 VDC	
Operating time	40 ms or less	
Indicator light	Operating range ..... Red LED illuminates. Proper operating range ..... Green LED illuminates.	
Standard	CE/UKCA marking, UL (CSA)	

Oilproof Heavy-duty Lead Wire Specifications

Auto switch model		D-P3DWASC	D-P3DWASE
Sheath	Outside diameter [mm]	ø4.8	
Insulator	Number of cores	2 cores	
	Outside diameter [mm]	ø1.52	
Conductor	Effective area [mm²]	0.5	
	Strand diameter [mm]	ø0.08	
Minimum bending radius [mm] (Reference values)		29	

- Impact resistance — Switch: 1000 m/s², Connector: 300 m/s²
- Insulation resistance — 50 MΩ or more at 500 VDC Mega (between lead wire and case)
- Withstand voltage — 1000 VAC for 1 minute (between lead wire and case)
- Ambient temperature — –10 to 60°C
- Enclosure — IEC60529 standard IP67
- Polarity: Non-polar

Dimensions (mm)

Body

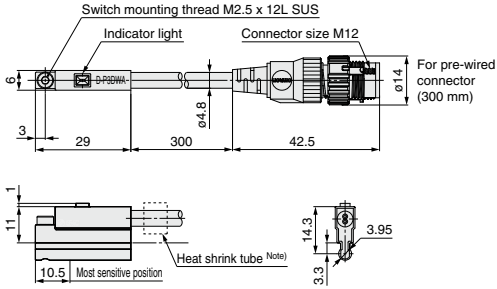

Note) A white color heat shrink tube is attached to the D-P3DWASE type only.

Magnetic Field Resistant 2-Color Indicator Solid State Auto Switch

D-P3DWA

(Electrical Entry: Grommet)

Refer to SMC website for the details of the products conforming to the international standards.

- **It is possible to use in an environment which generates a magnetic field disturbance (AC magnetic field).**
- **The proper operating range can be determined by the color of the light. (Red → Green ← Red)**

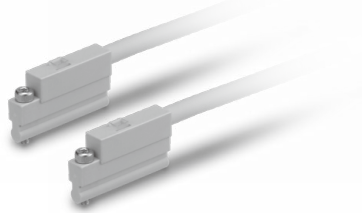

⚠Caution

Precautions

For single-phase AC welding machines.
If it is used for current inverter welders (including rectifying type) and condenser type welders, the magnetic field resistance is reduced. Please contact SMC regarding the performance.

Auto Switch Specifications

PLC: Programmable Logic Controller

D-P3DWA (With indicator light)	
Auto switch model	**D-P3DWA**
Applicable load	24 VDC relay, PLC
Load voltage	24 VDC
Load current	6 to 40 mA
Internal voltage drop	5 V or less
Leakage current	1 mA or less at 24 VDC
Operating time	40 ms or less
Indicator light	Operating range ..... Red LED illuminates. Proper operating range ..... Green LED illuminates.
Standard	CE/UKCA marking, UL (CSA)

Oilproof Heavy-duty Lead Wire Specifications

.Auto switch model		**D-P3DWA**
Sheath	Outside diameter [mm]	ø4.8
Insulator	Number of cores	2 cores (Brown/Blue)
	Outside diameter [mm]	ø1.52
Conductor	Effective area [mm²]	0.5
	Strand diameter [mm]	ø0.08
Minimum bending radius [mm] (Reference values)		29

- Impact resistance — Switch: 1000 m/s²
- Insulation resistance — 50 MΩ or more at 500 VDC Mega (between lead wire and case)
- Withstand voltage — 1000 VAC for 1 minute (between lead wire and case)
- Ambient temperature — –10 to 60°C
- Enclosure — IEC60529 standard IP67
- Polarity: Non-polar

Magnetic Field Resistance

If the current of the AC welding machine is 16000 A or lower, the auto switch can be used, even if the distance between the welding conductor (gun cable) and the cylinder/actuator or auto switch is 0 mm. Please contact SMC when the AC welding current exceeds 16000 A.

Weight

(g)

Auto switch model		**D-P3DWA**
Lead wire length	0.5 m (**Nil**)	22
	3 m (**L**)	104
	5 m (**Z**)	170

Dimensions

(mm)

Body

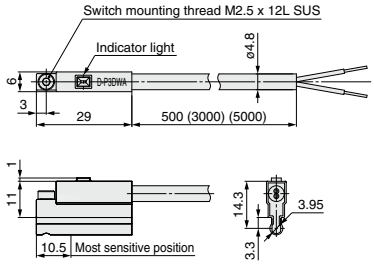

Magnetic Field Resistant 2-Color Indicator Solid State Auto Switch

D-P4DWSC/D-P4DWSE/D-P4DW□DPC

(Electrical Entry: Pre-wired connector)

Refer to SMC website for the details of the products conforming to the international standards.

Grommet

- **It is possible to use in an environment which generates a magnetic field disturbance (AC magnetic field).**
- **The proper operating range can be determined by the color of the light. (Red → Green ← Red)**

⚠Caution

Precautions

For single-phase AC welding machines.
Not applicable for DC inverter welding machines (including rectifying type) and or condenser type welding.

Connector pin

Model	Connector pin/Wiring			
	1	2	3	4
D-P4DWSC	—	—	OUT(∓)	OUT(±)
D-P4DWSE	OUT(±)	—	—	OUT(∓)
D-P4DW□DPC	—	—	OUT(∓)	OUT(±)

Auto Switch Specifications

PLC: Programmable Logic Controller

D-P4DW□ (With indicator light)					
Auto switch model	D-P4DWSC	D-P4DWSE	D-P4DWSDPC	D-P4DWMDPC	D-P4DWLDPC
Applicable load	24 VDC relay, PLC				
Load voltage	24 VDC (20 to 28 VDC)				
Load current	6 to 40 mA or less				
Internal voltage drop	5 V or less				
Leakage current	1 mA or less at 24 VDC				
Operating time	40 ms or less				
Indicator light	Operating range ····· Red LED illuminates. Proper operating range ····· Green LED illuminates.				
Standard	CE/UKCA marking				

Oilproof Heavy-duty Lead Wire Specifications

Auto switch model		D-P4DWSC	D-P4DWSE	D-P4DWSDPC	D-P4DWMDPC	D-P4DWLDPC
Length [m]		0.3	0.3	0.5	1	3
Sheath	Outside diameter [mm]	ø6				
Insulator	Number of cores	2 cores				
	Outside diameter [mm]	ø2.3				
Conductor	Effective area [mm²]	0.5				
	Strand diameter [mm]	ø0.08				
Minimum bending radius [mm] (Reference values)		48				

- Impact resistance — Switch: 1000 m/s², Connector: 300 m/s²

Note 1) Refer to page 1298 for solid state auto switch common specifications.
Note 2) Refer to page 1298 for lead wire lengths.

- Polarity — Non-polar

Magnetic Field Resistance

If the current of the AC welding machine is 16000 A or lower, the auto switch can be used, even if the distance between the welding conductor (gun cable) and the cylinder or switch is 0 mm.
Please contact SMC when the AC welding current exceeds 16000 A.

Weight

(g)

Auto switch model	D-P4DWSC	D-P4DWSE	D-P4DWSDPC	D-P4DWMDPC	D-P4DWLDPC
	35	35	52	68	161

Dimensions

(mm)

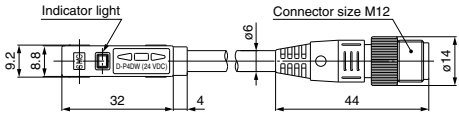

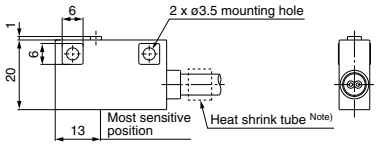

Note) Only for D-P4DWSE
Printed contents: SE 1-4

Magnetic Field Resistant 2-Color Indicator Solid State Auto Switch D-P4DW

Refer to SMC website for the details of the products conforming to the international standards.

Grommet

- **It is possible to use in an environment which generates a magnetic field disturbance (AC magnetic field).**
- **The proper operating range can be determined by the color of the light. (Red → Green ← Red)**

⚠Caution

Precautions

For single-phase AC welding machines.
Not applicable for DC inverter welding machines (including rectifying type) and or condenser type welding.

Auto Switch Specifications

PLC: Programmable Logic Controller

D-P4DW (With indicator light)	
Auto switch model	**D-P4DW**
Applicable load	24 VDC relay, PLC
Load voltage	24 VDC (20 to 28 VDC)
Load current	6 to 40 mA or less
Internal voltage drop	5 V or less
Leakage current	1 mA or less at 24 VDC
Operating time	40 ms or less
Indicator light	Operating range ····· Red LED illuminates. Proper operating range ····· Green LED illuminates.
Standard	CE/UKCA marking

Oilproof Heavy-duty Lead Wire Specifications

Auto switch model		**D-P4DW**
Sheath	Outside diameter [mm]	ø6
Insulator	Number of cores	2 cores (Brown/Blue)
	Outside diameter [mm]	ø1.92
Conductor	Effective area [mm²]	0.5
	Strand diameter [mm]	ø0.08
Minimum bending radius [mm] (Reference values)		36

Note 1) Refer to page 1298 for solid state auto switch common specifications.
Note 2) Refer to page 1298 for lead wire lengths.
- Polarity: Non-polar

Magnetic Field Resistance

If the current of the AC welding machine is 16000 A or lower, the auto switch can be used, even if the distance between the welding conductor (gun cable) and the cylinder or switch is 0 mm.
Please contact SMC when the AC welding current exceeds 16000 A.

Weight

(g)

Auto switch model		**D-P4DW**
Lead wire length	3 m (**L**)	150
	5 m (**Z**)	244

Dimensions

(mm)

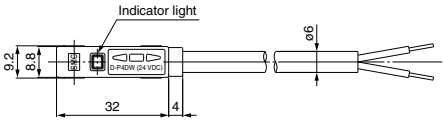

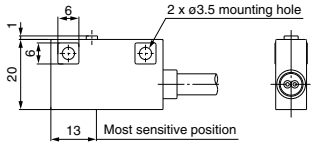

Heat Resistant 2-Color Indicator Solid State Auto Switch: Direct Mounting Type
D-M9NJ/D-M9PJ

Refer to SMC website for the details of the products conforming to the international standards.

Grommet

- **Improved heat resistant type**
- **The proper operating range can be determined by the color of the light. (Red → Green ← Red)**

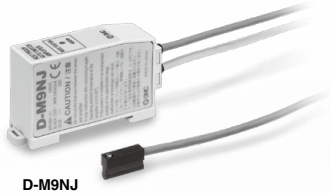

D-M9NJ

D-M9PJ

⚠Caution

Precautions

This auto switch can be mounted on the cylinder with heat resistant auto switch (-XB14) and is not applicable to the heat resistant cylinder (-XB6) since a magnet is not built in it.
Do not disconnect the cable between the sensor and amplifier by the customer.
Even when the sensor and amplifier are connected again, a contact resistance is produced, causing the auto switch to malfunction. Additionally, the sensor and amplifier are paired and they do not operate correctly in different combinations.

Auto Switch Specifications

PLC: Programmable Logic Controller

D-M9NJ/D-M9PJ (With indicator light)		
Auto switch model	**D-M9NJ**	**D-M9PJ**
Output type	NPN	PNP
Power supply voltage	20 to 26 VDC	
Current consumption	25 mA or less	
Load voltage	28 VDC or less	—
Load current	40 mA or less	
Internal voltage drop	0.8 V or less	
Leakage current	100 μA at 24 VDC	
Indicator light	Operating range ····· Red LED illuminates. Proper operating range ····· Green LED illuminates.	
Ambient temperature	Sensor section: 0 to 150°C Amplifier section: 0 to 60°C	
Impact resistance	Sensor section: 1000 m/s^2 Amplifier section: 300 m/s^2	
Standard	CE/UKCA marking	

Oilproof Heavy-duty Lead Wire Specifications (Grommet)

Auto switch model		**D-M9NJ**	**D-M9PJ**
Sheath	Outside diameter [mm]	ø3.4	
Insulator	Number of cores	3 cores (Brown/Blue/Black)	
	Outside diameter [mm]	ø1.1	
Conductor	Effective area [mm^2]	0.2	
	Strand diameter [mm]	ø0.08	
Minimum bending radius [mm] (Reference values)		21	

Weight

(g)

Auto switch model		**D-M9NJ**	**D-M9PJ**
Lead wire length	3 m (**L**)	160	
	5 m (**Z**)	200	

Dimensions

(mm)

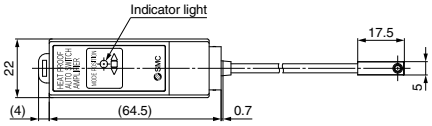

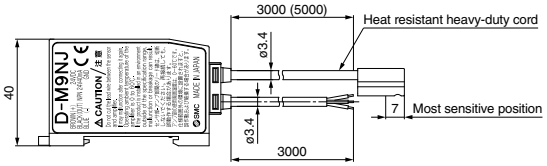

Heat Resistant 2-Color Indicator Solid State Auto Switch: Rail Mounting Type
D-F7NJ

Refer to SMC website for the details of the products conforming to the international standards.

Grommet

- **Improved heat resistant type**
- **The proper operating range can be determined by the color of the light. (Red → Green ← Red)**

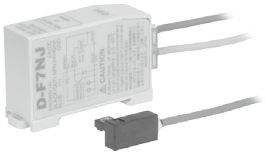

⚠Caution

Precautions

Auto switch which can be mounted on heat resistant, compact cylinder, CDQ2-XB14.
D-F7NJ is not applicable for the heat resistant type (-XB6) since a magnet is not built in it.

Auto Switch Specifications

PLC: Programmable Logic Controller

D-F7NJ (With indicator light)	
Auto switch model	**D-F7NJ**
Wiring type	3-wire
Output type	NPN
Applicable load	Relay, PLC
Power supply voltage	24 VDC (20 to 26 VDC)
Current consumption	25 mA or less
Load voltage	28 VDC or less
Load current	40 mA or less
Internal voltage drop	0.8 V or less
Leakage current	100 μA at 24 VDC
Indicator light	Operating range ····· Red LED illuminates. Proper operating range ····· Green LED illuminates.
Ambient temperature	Sensor section: 0 to 150°C Amplifier section: 0 to 60°C
Impact resistance	Sensor section: 1000 m/s² Amplifier section: 300 m/s²
Standard	CE/UKCA marking

Oilproof Heavy-duty Lead Wire Specifications (Grommet)

Auto switch model		**D-F7NJ**
Sheath	Outside diameter [mm]	ø3.4
Insulator	Number of cores	3 cores (Brown/Blue/Black)
	Outside diameter [mm]	ø1.1
Conductor	Effective area [mm²]	0.2
	Strand diameter [mm]	ø0.08
Minimum bending radius [mm] (Reference values)		21

Weight

(g)

Auto switch model		**D-F7NJ**
Lead wire length	3 m (**L**)	170
	5 m (**Z**)	210

Dimensions

(mm)

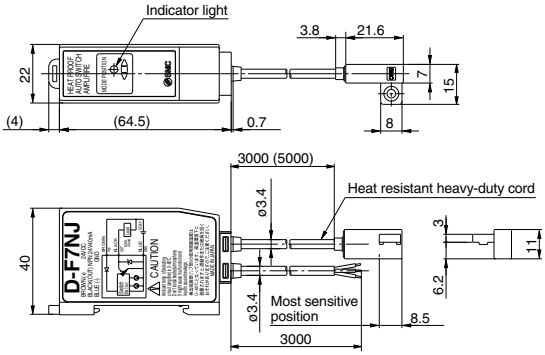

With Pre-wired Connector Solid State Auto Switch (Made to Order Specifications)

Refer to SMC website for the details of the products conforming to the international standards.

1 With Pre-wired Connector

- **Eliminates the harnessing work by cable with connector specifications**
- **Adopts global standardized connector (IEC61076-2)**
- **IP67 construction**

How to Order

D-M9N S A PC

Solid state auto switch Standard part no.
∗ For the applicable auto switch model, refer to the table below.

Cable length

S	0.5 m
M	1.0 m

Connector model

A	M8-3 pin
B	M8-4 pin
D	M12-4 pin

Note) Type A is not selectable for the auto switch with diagnostic output.

Connector Specifications

Connector model	M8-3 pin	M8-4 pin	M12-4 pin
Pin arrangement		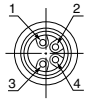	
Conformed standard	IEC61076-2-104		IEC61076-2-101
Impact resistance	300 m/s²		
Enclosure	Only with screw tightened IP67 (IEC60529 standard)		
Insulation resistance	100 MΩ or more at 500 VDC measured via megohmmeter		
Withstand voltage	1500 VAC 1 minute (between contacts), Leak current 1 mA or less		

Applicable Auto Switch

For details on the D-P3DWA series magnetic field resistant auto switch, refer to page 1342. And for details on the D-P4DW series, refer to page 1344.

2-wire

Mounting	Function	Applicable model
Rail mounting type	—	J79, F7BV
	2-color indicator	J79W, F7BWV
	Water resistant	F7BA, F7BAV
Band mounting type	—	H7B
		K59
	2-color indicator	H7BW
		K59W
	Water resistant	H7BA
		G5BA
Tie-rod mounting type	—	J59
	2-color indicator	J59W
	Water resistant	F5BA
Direct mounting type	—	Y59B, Y69B
		M9B, M9BV
		F8B
	Normally closed	M9BE, M9BEV
	2-color indicator	Y7BW, Y7BWV
		M9BW, M9BWV
	Water resistant	Y7BA
		M9BA, M9BAV
		M7BA
	Hygienic	F6B
Rotary actuator	—	T791/2
		T991/2, T99V1/2

3-wire

Mounting	Function	Applicable model
Rail mounting type	—	F79, F7P, F7NV, F7PV
	2-color indicator	F79W, F7PW, F7NWV
	With timer	F7NT
Band mounting type	—	H7A1, H7A2
		G59, G5P
	2-color indicator	H7NW, H7PW
		G59W, G5PW
	With timer	G5NT
Tie-rod mounting type	—	F59, F5P
	2-color indicator	F59W, F5PW
	With timer	F5NT
Direct mounting type	—	Y59A, Y7P, Y69A, Y7PV
		M9N, M9P, M9NV, M9PV
		F8N, F8P
	Normally closed	Y7G, Y7H
		F9G, F9H
		M9NE, M9PE, M9NEV, M9PEV
	2-color indicator	Y7NW, Y7PW, Y7NWV, Y7PWV
		M9NW, M9PW, M9NWV, M9PWV
	Water resistant	M9NA, M9NAV, M9PA, M9PAV
	Hygienic	F6N, F6P
Rotary actuator	—	S791/2, S7P1/2
		S991/2, S9P1/2, S99V1/2

4-wire

Mounting	Function	Applicable model
Rail mounting type	Direct mounting type	F79F
Band mounting type		H7NF
		G59F
Tie-rod mounting type		F59F

Note) M8-3 pins are not selectable for the 4-wire auto switch.

Connector pin arrangement

Sensor type	Meaning of contact number			
	1 pin	2 pin	3 pin	4 pin
2-wire	OUT(+)	—	—	OUT(–)
3-wire	DC(+)	—	DC(–)	OUT
4-wire	DC(+)	Diagnostic output	DC(–)	OUT

Note1) For details on the D-P3DWASC and D-P3DWASE, refer to page 1342. And for details on the D-P4DWSC and D-P4DWSE, refer to page 1344.
Note2) For details on the pin arrangement, refer to the pin arrangement in the connector specifications above.

M8-3 pin

M8-4 pin

M12-4 pin

Dimensions

Connector model	
M8-3 pin **4 pin**	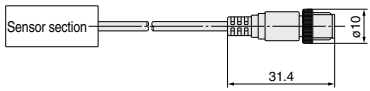
M12-4 pin	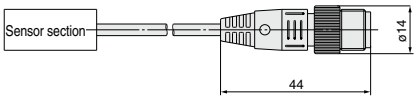

Connection (Socket side) Connector Cable

As the parts are not supplied from SMC, refer to the application examples listed in the below.
(For detail such as catalog availability, etc., please contact each manufacturer.)

Connector size	Number of pins	Manufacturer	Applicable series example
M8	3	OMRON Corporation	XS3□
		PHOENIX CONTACT GmbH & Co. KG	SAC-3P□
		Correns Corporation	M8-3D□
		TE Connectivity Ltd.	T40
		Hans Turck GmbH & Co. KG	PKG3M□
	4	OMRON Corporation	XS3□
		PHOENIX CONTACT GmbH & Co. KG	SAC-4P□
		Correns Corporation	M8-3D□
		TE Connectivity Ltd.	T40
		Hans Turck GmbH & Co. KG	PKG4M□
M12		OMRON Corporation	XS2□, XS5□
		PHOENIX CONTACT GmbH & Co. KG	SAC-4P□
		Correns Corporation	VA-4D□
		TE Connectivity Ltd.	T41
		Hans Turck GmbH & Co. KG	RKC4.4□
		Azbil Corporation	PA5-4I
		DDK Ltd.	CM02B

Weight for Connector Type

Part no.	Connector type	Weight
D-□□□APC	M8-3 pin	4 g
D-□□□BPC	M8-4 pin	4 g
D-□□□DPC	M12-4 pin	About 11 g

Made to Order Specifications: Solid State Auto Switch
-50: Without Indicator Light (Dark room) Specifications
-61: Oilproof Flexible Heavy-duty Cord Specifications

Symbol

2 Without Indicator Light (for dark room specifications) -50

Possible to use under the environment which hates a light.

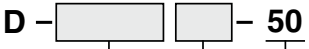

Solid state auto switch model
Applicable part no.: General purpose type, solid state auto switch

Note) Please consult with SMC for water resistant type, timer equipped type, diagnostic output type, wide range detection type, magnetic field resistant type, heat resistant type.

Lead wire length
For lead wire length, refer to page 1298.

Without indicator light (for dark room specifications)

Dimensions and specifications are common as standard products with the exception of no indicator light.

Symbol

3 Oilproof Flexible Heavy-duty Cord Specifications -61

This is the product which uses a heavy-duty cord having flexible characteristics 5 times (SMC comparison) as strong as oilproof heavy-duty cord used in the standard products.

Solid state auto switch part no.
Applicable part no: All the solid state auto switches except the diagnostic output type, connector type, magnetic field resistant type, heat resistant type

Note) Oilproof flexible heavy-duty cord is used for the D-M9 (Except D-M9K and D-M9□J), D-Y (Except D-Y7K) and D-F6 series as standard. No need to suffix -61 to the end of part number.

Lead wire length
For lead wire length, refer to page 1298.

Oilproof flexible heavy-duty cord specifications

Specifications are the same as standard products with the exception of lead wire specifications.
Lead wire: For D-F8 type····· ø2.7, 0.15 mm^2, 3 cores (Brown, Blue, Black), 2 cores (Brown, Blue)
For other model nos.····· ø3.4, 0.15 mm^2, 3 cores (Brown, Blue, Black), 2 cores (Brown, Blue)

Dimensions are identical with D-F5 type, G5 type, J59 type, K59 type. Lead wire diameter is changed from ø4 to ø3.4. In other series products, it is common as standard product's specifications.

Solid State Auto Switch Made to Order
-551: -918: UL/CSA Certified

4	UL/CSA Certified	Symbol -551, 918

UL, CSA certified
UL, CSA certified + Compatible with material restrictions for secondary battery manufacture

How to Order

⚠Caution Auto switches must be ordered separately. They will be packaged separately. The auto switch cannot be ordered or shipped together with an actuator.

D – M9 □ □ □ □ – □

Output type

Symbol	Specifications
B	DC 2-wire type
N	DC 3-wire type NPN output
P	DC 3-wire type PNP output

Indicator light

Symbol	Specifications
Nil	1 color

Electrical entry direction

Symbol	Specifications
Nil	Axial entry
V	Perpendicular entry

Lead wire length + Connector

Symbol	Specifications
Nil	0.5 [m]
L	3 [m]
SAPC	M8-3 pin 0.5 [m]
SDPC	M12-4 pin 0.5 [m]

Certification type

Symbol	Specifications
551	UL, CSA certified
918	UL/CSA certified, Secondary battery compatible

How to Identify Certified Products

Certification label

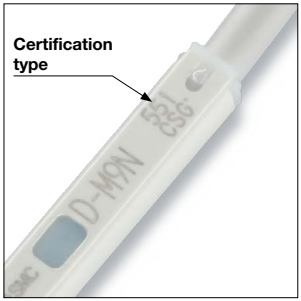

The dimensions and specifications are the same as those of the standard (general purpose) D-M9□ auto switch.

SMC

Reed Auto Switches
General Purpose Type, 2-Color Indicator

Reed Switch Variations

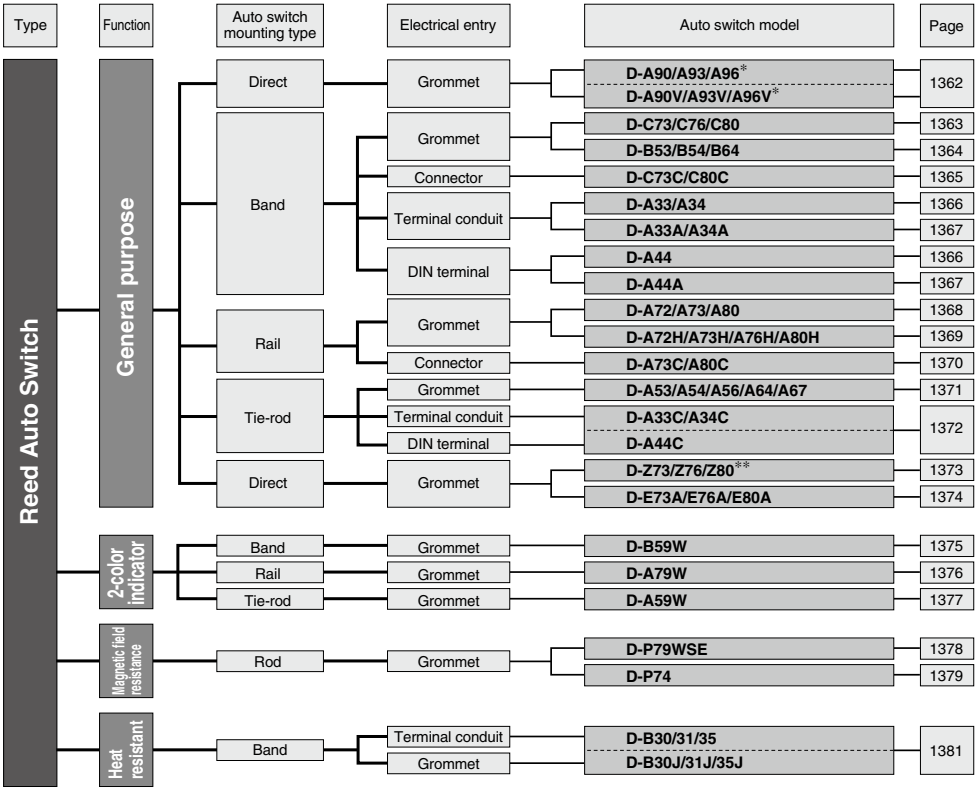

∗ Auto switches with an asterisk (∗) can be mounted on a band (excluding D-A9□V), rail, tie-rod or square groove with an auto switch mounting bracket. Refer to pages 1386, 1390, 1394 and 1401 to 1403 for details.

∗∗ This auto switch can be mounted by tie-rod with using auto switch mounting bracket. For details, refer to page 1397.

Reed Auto Switch
Direct Mounting Type
D-A90(V)/D-A93(V)/D-A96(V)

Refer to SMC website for the details of the products conforming to the international standards.

Grommet

⚠Caution

Precautions

1. Do not drop or bump the auto switch while handling it as it may result in the auto switch breaking.
2. Do not remove the protective cover attached to the product body until the product is ready to be mounted on the actuator.
3. Fix the auto switch with the existing screw installed on the auto switch body. The auto switch may be damaged if a screw other than the one supplied is used.

Auto Switch Specifications

PLC: Programmable Logic Controller

D-A90, D-A90V (Without indicator light)			
Auto switch model	D-A90, D-A90V		
Applicable load	IC circuit, Relay, PLC		
Load voltage	24 V AC/DC or less	48 V AC/DC or less	100 V AC/DC or less
Maximum load current	50 mA	40 mA	20 mA
Internal circuit*	④		
Contact protection circuit	None		
Internal resistance	1 Ω or less (Including lead wire length of 3 m)		
Standard	CE/UKCA marking		

D-A93, D-A93V, D-A96, D-A96V (With indicator light)			
Auto switch model	D-A93, D-A93V		D-A96, D-A96V
Applicable load	Relay, PLC		IC circuit
Load voltage	24 VDC(4)	100 VAC	4 to 8 VDC
Load current range and Maximum load current (3)	5 to 40 mA	5 to 20 mA	20 mA
Internal circuit*	③		⑤
Contact protection circuit	None		
Internal voltage drop	D-A93: 2.4 V or less (up to 20 mA)/3 V or less (up to 40 mA) D-A93V: 2.7 V or less		0.8 V or less
Indicator light	Red LED illuminates when turned ON.		
Standard	CE/UKCA marking		

Oilproof Heavy-duty Lead Wire Specifications

Auto switch model		D-A90(V)	D-A93(V)	D-A96(V)
Sheath	Outside diameter [mm]	ø2.7		
Insulator	Number of cores	2 cores (Brown/Blue)		3 cores (Brown/Blue/Black)
	Outside diameter [mm]	ø0.96		ø0.91
Conductor	Effective area [mm²]	0.18		0.15
	Strand diameter [mm]	ø0.08		
Lead wire minimum bending radius [mm] (Reference values)		17		

∗ Refer to the applicable internal circuit diagram (numbers ① to ⑦) on page 1301.
Note 1) Refer to page 1298 for reed auto switch common specifications.
Note 2) Refer to page 1298 for lead wire lengths.
Note 3) Under 5 mA, the strength of the indicator light is poor. In some cases, visibility of the indicator light will not be possible where the output signal is less than 2.5 mA. However, there is no problem in terms of contact output, when an output signal exceeds 1 mA or more.
Note 4) The auto switches can operate at 12 VDC, but consider the internal voltage drop of the auto switch described in Reed Auto Switch Precautions on page 18.

Weight

(g)

Model		D-A90	D-A90V	D-A93	D-A93V	D-A96	D-A96V
Lead wire length	0.5 m (**Nil**)	6	6	6	6	8	8
	1 m (**M**)	—	—	11	—	—	—
	3 m (**L**)	30	30	30	30	41	41
	5 m (**Z**)	—	—	47	47	—	—

Dimensions

(mm)

D-A90/D-A93/D-A96

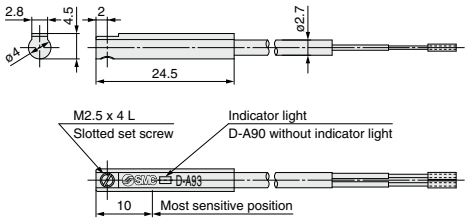

D-A90V/D-A93V/D-A96V

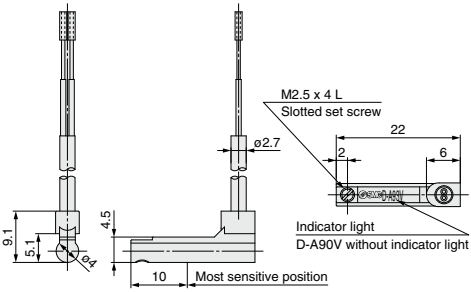

With Pre-wired Connector
Reed Auto Switch (Made to Order Specifications)
D-A90(V)/D-A93(V)/D-A96(V)

Refer to SMC website for the details of the products conforming to the international standards.

Grommet

⚠Caution

Precautions

1. Do not drop or bump the auto switch while handling it as it may result in the auto switch breaking.
2. Do not remove the protective cover attached to the product body until the product is ready to be mounted on the actuator.
3. Fix the auto switch with the existing screw installed on the auto switch body. The auto switch may be damaged if a screw other than the one supplied is used.

How to Order

D− A90 S A PC

Reed auto switch part no.

A90
A90V
A93
A93V
A96
A96V

Cable length

S	0.5 m
M	1.0 m
L	3.0 m
Z	5.0 m

Connector model

A	M8-3 pin
D	M12-4 pin

Connector specifications

Connector model	M8-3 pin	M12-4 pin
Pin arrangement		
Conformed standard	IEC61076-2-104	IEC61076-2-101
Impact resistance	300 m/s²	
Enclosure	Only with screw tightened IP67 (IEC60529 standard)	
Insulation resistance	100 MΩ or more at 500 VDC measured via megohmmeter	
Withstand voltage	1500 VAC 1 minute (between contacts), Leak current 1 mA or less	

Connector pin arrangement

Sensor type	Meaning of contact number			
	1 pin	2 pin	3 pin	4 pin
2-wire type	OUT (+)	—	—	OUT (–)
3-wire type	DC (+)	—	DC (–)	OUT

∗ For details on the pin arrangement, refer to the pin arrangement in the connector specifications above.

Additional weight by connector type

Part no.	Connector type	Weight
D-□□□APC	M8-3 pin	4 g
D-□□□DPC	M12-4 pin	Approx. 11 g

Auto Switch Specifications

PLC: Programmable Logic Controller

D-A90, D-A90V (Without indicator light)		
Auto switch model	**D-A90, D-A90V**	
Applicable load	IC circuit, Relay, PLC	
Load voltage	24 VDC or less	
Maximum load current	50 mA	
Internal circuit∗	④	
Contact protection circuit	None	
Internal resistance	1 Ω or less	
Standard	CE/UKCA marking	
D-A93, D-A93V, D-A96, D-A96V (With indicator light)		
Auto switch model	**D-A93, D-A93V**	**D-A96, D-A96V**
Applicable load	Relay, PLC	IC circuit
Load voltage	24 VDC(4)	4 to 8 VDC
Load current range and Maximum load current (3)	5 to 40 mA	20 mA
Internal circuit∗	③	⑤
Contact protection circuit	None	
Internal voltage drop	D-A93: 2.4 V or less (up to 20 mA)/3 V or less (up to 40 mA) D-A93V: 2.7 V or less	0.8 V or less
Indicator light	Red LED illuminates when turned ON.	
Standard	CE/UKCA marking	

Refer to the D-A9□ type for specifications other than those listed in the table above.
∗ Refer to the applicable internal circuit diagram (numbers ① to ⑦) on page 1301.
Note 1) Refer to page 1298 for reed auto switch common specifications.
Note 2) Refer to page 1298 for lead wire lengths.
Note 3) Under 5 mA, the strength of the indicator light is poor. In some cases, visibility of the indicator light will not be possible where the output signal is less than 2.5 mA. However, there is no problem in terms of contact output, when an output signal exceeds 1 mA or more.
Note 4) The auto switches can operate at 12 VDC, but consider the internal voltage drop of the auto switch described in Reed Auto Switch Precautions on page 18.

Dimensions

Connector model	
M8-3 pin	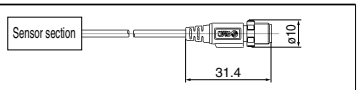
M12-4 pin	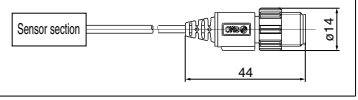

Connection (Socket side) Connector Cable

As the parts are not supplied from SMC, refer to the application examples listed in the below.
(For detail such as catalog availability, etc., please contact each manufacturer.)

Connector size	Number of pins	Manufacturer	Applicable series example
M8	3	OMROM Corporation	XS3□
		PHOENIX CONTACT GmbH & Co. KG	SAC-3P□
		Correns Corporation	M8-3D□
		TE Connectivity Ltd.	T40
		Hans Turck GmbH & Co. KG	PKG3M□
M12	4	OMROM Corporation	XS2□, XS5□
		PHOENIX CONTACT GmbH & Co. KG	SAC-4P□
		Correns Corporation	VA-4D□
		TE Connectivity Ltd.	T41
		Hans Turck GmbH & Co. KG	RKC4.4□
		Azbil Corporation	PA5-4I
		DDK Ltd.	CM02B

SMC

Reed Auto Switch
Band Mounting Type
D-C73/D-C76/D-C80

Refer to SMC website for the details of the products conforming to the international standards.

Grommet

⚠Caution

Precautions

Do not drop or bump the auto switch while handling it as it may result in the auto switch breaking.

Auto Switch Specifications

PLC: Programmable Logic Controller

D-C7 (With indicator light)			
Auto switch model	D-C73		D-C76
Applicable load	Relay, PLC		IC circuit
Load voltage	24 VDC(4)	100 VAC	4 to 8 VDC
Max. load current and range (3)	5 to 40 mA	5 to 20 mA	20 mA
Internal circuit*	③		⑤
Contact protection circuit	None		
Internal voltage drop	2.4 V or less		0.8 V or less
Indicator light	Red LED illuminates when turned ON.		
Standard	CE/UKCA marking		

D-C8 (Without indicator light)			
Auto switch model	D-C80		
Applicable load	Relay, PLC, IC circuit		
Load voltage	24 V AC/DC or less	48 V AC/DC	100 V AC/DC
Max. load current	50 mA	40 mA	20 mA
Internal circuit*	④		
Contact protection circuit	None		
Internal resistance	1 Ω or less (Including lead wire length of 3 m)		
Standard	CE/UKCA marking		

Oilproof Heavy-duty Lead Wire Specifications

Auto switch model		D-C73	D-C76	D-C80
Sheath	Outside diameter [mm]	ø3.4		
Insulator	Number of cores	2 cores (Brown/Blue)	3 cores (Brown/Blue/Black)	2 cores (Brown/Blue)
	Outside diameter [mm]	ø1.1		
Conductor	Effective area [mm²]	0.2		
	Strand diameter [mm]	ø0.08		
Lead wire minimum bending radius [mm] (Reference values)		21		

* Refer to the applicable internal circuit diagram (numbers ① to ⑦) on page 1301.
Note 1) Refer to page 1298 for reed auto switch common specifications.
Note 2) Refer to page 1298 for lead wire lengths.
Note 3) Under 5 mA, the strength of the indicator light is poor. In some cases, visibility of the indicator light will not be possible where the output signal is less than 2.5 mA. However, there is no problem in terms of contact output, when an output signal exceeds 1 mA or more.
Note 4) The auto switches can operate at 12 VDC, but consider the internal voltage drop of the auto switch described in Reed Auto Switch Precautions on page 18.

Weight

(g)

Auto switch model		D-C73	D-C76	D-C80
Lead wire length	0.5 m (**Nil**)	9	10	9
	3 m (**L**)	46	50	46
	5 m (**Z**)	76	—	—

Dimensions

(mm)

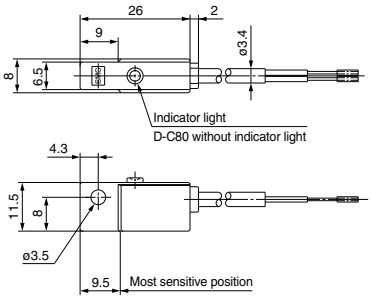

Reed Auto Switch
Band Mounting Type
D-B53/D-B54/D-B64

Refer to SMC website for the details of the products conforming to the international standards.

Grommet

⚠Caution

Precautions

Do not drop or bump the auto switch while handling it as it may result in the auto switch breaking.

Auto Switch Specifications

PLC: Programmable Logic Controller

D-B5 (With indicator light)				
Auto switch model	**D-B53**	**D-B54**		
Applicable load	PLC	Relay, PLC		
Load voltage	24 VDC(4)	24 VDC(4)	100 VAC	200 VAC
Load current range (3)	5 to 50 mA	5 to 50 mA	5 to 25 mA	5 to 12.5 mA
Internal circuit*	③	①		
Contact protection circuit	None	Built-in		
Internal voltage drop	2.4 V or less	2.4 V or less (Up to 20 mA)/3.5 V or less (Up to 50 mA)		
Indicator light	Red LED illuminates when turned ON.			
Standard	CE/UKCA marking			

D-B6 (Without indicator light)			
Auto switch model	**D-B64**		
Applicable load	Relay, PLC		
Load voltage	24 V^{AC}_{DC} or less	100 VAC	200 VAC
Max. load current	Max. 50 mA	Max. 25 mA	Max. 12.5 mA
Internal circuit*	②		
Contact protection circuit	Built-in		
Internal resistance	25 Ω or less		
Standard	CE/UKCA marking		

Oilproof Heavy-duty Lead Wire Specifications

Auto switch model		**D-B53/B54/B64**
Sheath	Outside diameter [mm]	ø4
Insulator	Number of cores	2 cores (Brown/Blue)
	Outside diameter [mm]	ø1.22
Conductor	Effective area [mm²]	0.3
	Strand diameter [mm]	ø0.08
Lead wire minimum bending radius [mm] (Reference values)		24

∗ Refer to the applicable internal circuit diagram (numbers ① to ⑦) on page 1301.
Note 1) Refer to page 1298 for reed auto switch common specifications.
Note 2) Refer to page 1298 for lead wire lengths.
Note 3) Under 5 mA, the strength of the indicator light is poor. In some cases, visibility of the indicator light will not be possible where the output signal is less than 2.5 mA. However, there is no problem in terms of contact output, when an output signal exceeds 1 mA or more.
Note 4) The auto switches can operate at 12 VDC, but consider the internal voltage drop of the auto switch described in Reed Auto Switch Precautions on page 18.

Weight

(g)

Auto switch model		**D-B53**	**D-B54**	**D-B64**
Lead wire length	0.5 m (**Nil**)	22	22	22
	3 m (**L**)	78	78	78
	5 m (**Z**)	126	126	—

Dimensions

(mm)

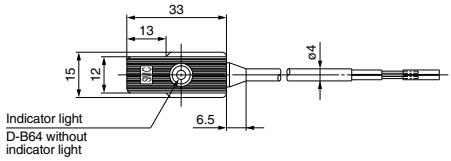

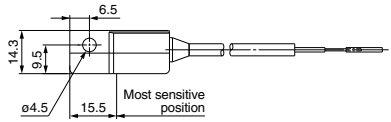

Reed Auto Switch
Band Mounting Type
D-C73C/D-C80C

Refer to SMC website for the details of the products conforming to the international standards.

Connector

⚠Caution

Precautions

1. Do not drop or bump the auto switch while handling it as it may result in the auto switch breaking.
2. Confirm that the connector is appropriately tightened. If tightened insufficiently, the waterproof performance will deteriorate.
3. For details, refer to page 1385.

Auto Switch Specifications

PLC: Programmable Logic Controller

D-C73C (With indicator light)	
Auto switch model	**D-C73C**
Applicable load	Relay, PLC
Load voltage	24 VDC (5)
Load current range (4)	5 to 40 mA
Internal circuit*	③
Contact protection circuit	None
Internal voltage drop	2.4 V or less
Indicator light	Red LED illuminates when turned ON.
Standard	CE/UKCA marking

D-C80C (Without indicator light)	
Auto switch model	**D-C80C**
Applicable load	Relay, PLC
Load voltage	24 V^{AC}_{DC} or less
Maximum load current	50 mA
Internal circuit*	④
Contact protection circuit	None
Internal resistance	1 Ω or less (Including lead wire length of 3 m)
Standard	CE/UKCA marking

* Refer to the applicable internal circuit diagram (numbers ① to ⑦) on page 1301.
Note 1) Refer to page 1298 for reed auto switch common specifications.
Note 2) Refer to page 1298 for lead wire lengths.
Note 3) Lead wire with connector may be shipped with switch.
Note 4) Under 5 mA, the strength of the indicator light is poor. In some cases, visibility of the indicator light will not be possible where the output signal is less than 2.5 mA. However, there is no problem in terms of contact output, when an output signal exceeds 1 mA or more.
Note 5) The auto switches can operate at 12 VDC, but consider the internal voltage drop of the auto switch described in Reed Auto Switch Precautions on page 18.

Weight

(g)

Auto switch model		D-C73C	D-C80C
Lead wire length	0.5 m (**Nil**)	14	14
	3 m (**L**)	53	53
	5 m (**Z**)	83	83

Lead wires with a connector indication

Part No. of Lead Wires with Connectors
(Applicable only for connector type)

Model	Lead wire length
D-LC05	0.5 m
D-LC30	3 m
D-LC50	5 m

Dimensions

(mm)

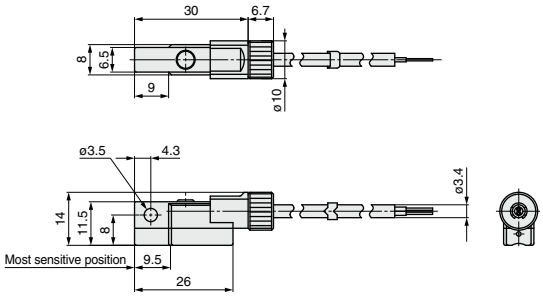

Reed Auto Switch
Band Mounting Type
D-A33/D-A34/D-A44

Refer to SMC website for the details of the products conforming to the international standards.

Terminal conduit: D-A3
DIN terminal: D-A4

⚠Caution

Precautions

1. Do not drop or bump the auto switch while handling it as it may result in the auto switch breaking.
2. Use cable whose O.D. is within the size in the figure to maintain water resistant performance.
3. After wiring, confirm that tightening gland and all screws are tightened.

Auto Switch Specifications

PLC: Programmable Logic Controller

D-A3 (With indicator light) Terminal conduit				
Auto switch model	D-A33	D-A34		
Applicable load	PLC	Relay, PLC		
Load voltage	24 VDC (3)	24 VDC (3)	100 VAC	200 VAC
Load current range (2)	5 to 50 mA	5 to 50 mA	5 to 25 mA	5 to 12.5 mA
Internal circuit*	③	①		
Contact protection circuit	None	Built-in		
Internal voltage drop	2.4 V or less	2.4 V or less (Up to 20 mA)/3.5 V or less (Up to 50 mA)		
Indicator light	Red LED illuminates when turned ON.			
Standard	CE/UKCA marking			

D-A44 (With indicator light) DIN terminal			
Auto switch model	D-A44		
Applicable load	Relay, PLC		
Load voltage	24 VDC (3)	100 VAC	200 VAC
Load current range	5 to 50 mA	5 to 25 mA	5 to 12.5 mA
Internal circuit*	①		
Contact protection circuit	Built-in		
Internal voltage drop	2.4 V or less (Up to 20 mA)/3.5 V or less (Up to 50 mA)		
Indicator light	Red LED illuminates when turned ON.		
Standard	CE/UKCA marking		

* Refer to the applicable internal circuit diagram (numbers ① to ⑦) on page 1301.
Note 1) Refer to page 1298 for reed auto switch common specifications.
Note 2) Under 5 mA, the strength of the indicator light is poor. In some cases, visibility of the indicator light will not be possible where the output signal is less than 2.5 mA. However, there is no problem in terms of contact output, when an output signal exceeds 1 mA or more.
Note 3) The auto switches can operate at 12 VDC, but consider the internal voltage drop of the auto switch described in Reed Auto Switch Precautions on page 18.

Weight

(g)

Auto switch model		D-A33	D-A34	D-A44
Lead wire	None	116	116	114

Dimensions

(mm)

D-A3

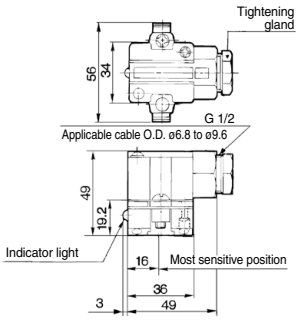

D-A44

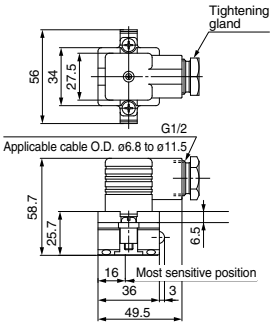

Reed Auto Switch
Band Mounting Type
D-A33A/D-A34A/D-A44A

Refer to SMC website for the details of the products conforming to the international standards.

Terminal conduit: D-A3□A
DIN terminal: D-A44A

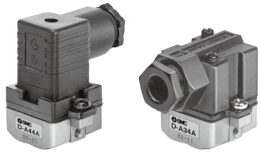

⚠Caution

Precautions

1. Do not drop or bump the auto switch while handling it as it may result in the auto switch breaking.
2. Use cable whose O.D. is within the size in the figure to maintain water resistant performance.
3. After wiring, confirm that tightening gland and all screws are tightened.

Auto Switch Specifications

PLC: Programmable Logic Controller

D-A3□A (With indicator light) Terminal conduit				
Auto switch model	D-A33A	D-A34A		
Applicable load	PLC	Relay, PLC		
Load voltage	24 VDC (3)	24 VDC (3)	100 VAC	200 VAC
Load current range (2)	5 to 50 mA	5 to 50 mA	5 to 25 mA	5 to 12.5 mA
Internal circuit*	③	①		
Contact protection circuit	None	Built-in		
Internal voltage drop	2.4 V or less	2.4 V or less (Up to 20 mA)/3.5 V or less (Up to 50 mA)		
Indicator light	Red LED illuminates when turned ON.			
Standard	CE/UKCA marking			

D-A44A (With indicator light) DIN terminal			
Auto switch part model	D-A44A		
Applicable load	Relay, PLC		
Load voltage	24 VDC (3)	100 VAC	200 VAC
Load current range	5 to 50 mA	5 to 25 mA	5 to 12.5 mA
Internal circuit*	①		
Contact protection circuit	Built-in		
Internal voltage drop	2.4 V or less (Up to 20 mA)/3.5 V or less (Up to 50 mA)		
Indicator light	Red LED illuminates when turned ON.		
Standard	CE/UKCA marking		

* Refer to the applicable internal circuit diagram (numbers ① to ⑦) on page 1301.
Note 1) Refer to page 1298 for reed auto switch common specifications.
Note 2) Under 5 mA, the strength of the indicator light is poor. In some cases, visibility of the indicator light will not be possible where the output signal is less than 2.5 mA. However, there is no problem in terms of contact output, when an output signal exceeds 1 mA or more.
Note 3) The auto switches can operate at 12 VDC, but consider the internal voltage drop of the auto switch described in Reed Auto Switch Precautions on page 18.

Weight

(g)

Auto switch model		D-A33A	D-A34A	D-A44A
Lead wire	None	112	112	110

Dimensions

(mm)

D-A3□A

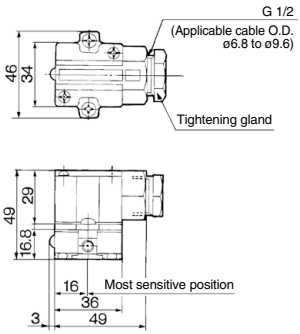

D-A44A

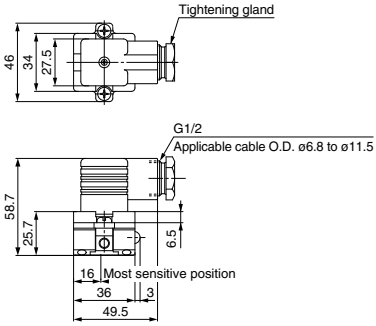

Reed Auto Switch
Rail Mounting Type
D-A72/D-A73/D-A80

Refer to SMC website for the details of the products conforming to the international standards.

Grommet
Electrical entry: Perpendicular

⚠Caution

Precautions

Do not drop or bump the auto switch while handling it as it may result in the auto switch breaking.

Auto Switch Specifications

PLC: Programmable Logic Controller

D-A7 (With indicator light)			
Auto switch model	**D-A72**	**D-A73**	
Applicable load	Relay, PLC	Relay, PLC	
Load voltage	200 VAC	24 VDC (4)	100 VAC
Load current range (3)	5 to 10 mA	5 to 40 mA	5 to 20 mA
Internal circuit*	③		
Contact protection circuit	None		
Internal voltage drop	2.4 V or less		
Indicator light	Red LED illuminates when turned ON.		
Standard	CE/UKCA marking		
D-A8 (Without indicator light)			
Auto switch model	**D-A80**		
Applicable load	Relay, IC circuit, PLC		
Load voltage	24 V AC/DC or less	48 V AC/DC	100 V AC/DC
Maximum load current	50 mA	40 mA	20 mA
Internal circuit*	④		
Contact protection circuit	None		
Internal resistance	1 Ω or less (Including lead wire length of 3 m)		
Standard	CE/UKCA marking		

Oilproof Heavy-duty Lead Wire Specifications

Auto switch model		**D-A72**	**D-A73**	**D-A80**
Sheath	Outside diameter [mm]	ø3.4		
Insulator	Number of cores	2 cores (Brown/Blue)		
	Outside diameter [mm]	ø1.1		
Conductor	Effective area [mm²]	0.2		
	Strand diameter [mm]	ø0.08		
Lead wire minimum bending radius [mm] (Reference values)		21		

• Lead wire Oilproof vinyl cabtire cord: ø3.4, 0.2 mm², 2 cores (Brown, Blue), 0.5 m
* Refer to the applicable internal circuit diagram (numbers ① to ⑦) on page 1301.
Note 1) Refer to page 1298 for reed auto switch common specifications.
Note 2) Refer to page 1298 for lead wire lengths.
Note 3) Under 5 mA, the strength of the indicator light is poor. In some cases, visibility of the indicator light will not be possible where the output signal is less than 2.5 mA. However, there is no problem in terms of contact output, when an output signal exceeds 1 mA or more.
Note 4) The auto switches can operate at 12 VDC, but consider the internal voltage drop of the auto switch described in Reed Auto Switch Precautions on page 18.

Weight

(g)

Auto switch model		**D-A72**	**D-A73**	**D-A80**
Lead wire length	0.5 m (**Nil**)	10	10	10
	3 m (**L**)	47	47	47
	5 m (**Z**)	—	77	—

Dimensions

(mm)

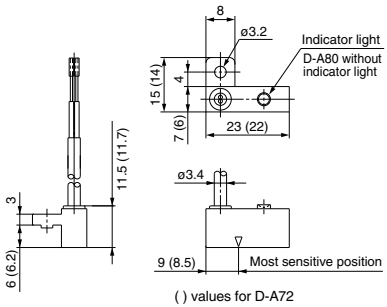

( ) values for D-A72

Reed Auto Switch
Rail Mounting Type
D-A7□H/D-A80H

Refer to SMC website for the details of the products conforming to the international standards.

Grommet
Electrical entry: In-line

⚠Caution

Precautions

Do not drop or bump the auto switch while handling it as it may result in the auto switch breaking.

Auto Switch Specifications

PLC: Programmable Logic Controller

D-A7□H (With indicator light)

Auto switch model	D-A72H	D-A73H		D-A76H
Applicable load	Relay, PLC	Relay, PLC		IC circuit
Load voltage	200 VAC	24 VDC (4)	100 VAC	4 to 8 VDC
Max. load current/Load current range(3)	5 to 10 mA	5 to 40 mA	5 to 20 mA	20 mA
Internal circuit*	③			⑤
Contact protection circuit	None			
Internal voltage drop	2.4 V or less			0.8 V or less
Indicator light	Red LED illuminates when turned ON.			
Standard	CE/UKCA marking			

D-A80H (Without indicator light)

Auto switch model	D-A80H		
Applicable load	Relay, IC circuit, PLC		
Load voltage	24 V AC/DC or less	48 V AC/DC	100 V AC/DC
Maximum load current	50 mA	40 mA	20mA
Internal circuit*	④		
Contact protection circuit	None		
Internal resistance	1 Ω or less (Including lead wire length of 3 m)		
Standard	CE/UKCA marking		

Oilproof Heavy-duty Lead Wire Specifications

Auto switch model		D-A72H/A73H	D-A76H	D-A80H
Sheath	Outside diameter [mm]	ø3.4		
Insulator	Number of cores	2 cores (Brown/Blue)	3 cores (Brown/Blue/Black)	2 cores (Brown/Blue)
	Outside diameter [mm]	ø1.1		
Conductor	Effective area [mm²]	0.2		
	Strand diameter [mm]	ø0.08		
Lead wire minimum bending radius [mm] (Reference values)		21		

* Refer to the applicable internal circuit diagram (numbers ① to ⑦) on page 1301.
Note 1) Refer to page 1298 for reed auto switch common specifications.
Note 2) Refer to page 1298 for lead wire lengths.
Note 3) Under 5 mA, the strength of the indicator light is poor. In some cases, visibility of the indicator light will not be possible where the output signal is less than 2.5 mA. However, there is no problem in terms of contact output, when an output signal exceeds 1 mA or more.
Note 4) The auto switches can operate at 12 VDC, but consider the internal voltage drop of the auto switch described in Reed Auto Switch Precautions on page 18.

Weight

(g)

Auto switch model		D-A72H	D-A73H	D-A76H	D-A80H
Lead wire length	0.5 m (**Nil**)	10	10	11	10
	3 m (**L**)	47	47	52	47
	5 m (**Z**)	—	77	—	—

Dimensions

(mm)

D-A7□H, D-A80H

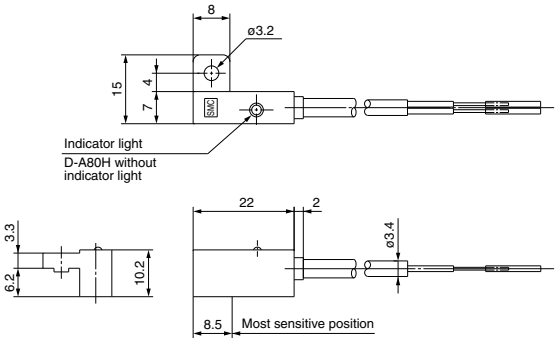

Reed Auto Switch
Rail Mounting Type
D-A73C/D-A80C

Refer to SMC website for the details of the products conforming to the international standards.

Connector

⚠Caution

Precautions

1. Do not drop or bump the auto switch while handling it as it may result in the auto switch breaking.
2. Confirm that the connector is appropriately tightened. If tightened insufficiently, the waterproof performance will deteriorate.
3. Refer to page 1385 for the details.

Lead wires with a connector indication

Part No. of Lead Wires with Connectors
(Applicable only for connector type)

Model	Lead wire length
D-LC05	0.5 m
D-LC30	3 m
D-LC50	5 m

Auto Switch Specifications

PLC: Programmable Logic Controller

D-A73C (With indicator light)	
Auto switch model	**D-A73C**
Applicable load	Relay, PLC
Load voltage	24 VDC (5)
Load current range (4)	5 to 40 mA
Internal circuit*	③
Contact protection circuit	None
Internal voltage drop	2.4 V or less
Indicator light	Red LED illuminates when turned ON.
Standard	CE/UKCA marking

D-A80C (Without indicator light)	
Auto switch model	**D-A80C**
Applicable load	Relay, IC circuit, PLC
Load voltage	24 V AC/DC
Maximum load current	50 mA
Internal circuit*	④
Contact protection circuit	None
Internal resistance	1 Ω or less (Including lead wire length of 3 m)
Standard	CE/UKCA marking

* Refer to the applicable internal circuit diagram (numbers ① to ⑦) on page 1301.
Note 1) Refer to page 1298 for reed auto switch common specifications.
Note 2) Refer to page 1298 for lead wire lengths.
Note 3) Lead wire with connector may be shipped with the auto switch.
Note 4) Under 5 mA, the strength of the indicator light is poor. In some cases, visibility of the indicator light will not be possible where the output signal is less than 2.5 mA. However, there is no problem in terms of contact output, when an output signal exceeds 1 mA or more.
Note 5) The auto switches can operate at 12 VDC, but consider the internal voltage drop of the auto switch described in Reed Auto Switch Precautions on page 18.

Weight

(g)

Auto switch model		D-A73C	D-A80C
Lead wire length	0.5 m (**Nil**)	12	12
	3 m (**L**)	54	54
	5 m (**Z**)	84	84

Dimensions

(mm)

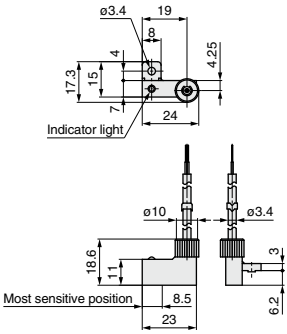

Reed Auto Switch
Tie-rod Mounting Type
D-A5□/D-A6□

Refer to SMC website for the details of the products conforming to the international standards.

Grommet

⚠Caution

Precautions

Do not drop or bump the auto switch while handling it as it may result in the auto switch breaking.

Auto Switch Specifications

PLC: Programmable Logic Controller

D-A5 (With indicator light)					
Auto switch model	D-A53	D-A54			D-A56
Applicable load	PLC	Relay, PLC			IC circuit
Load voltage	24 VDC (4)	24 VDC (4)	100 VAC	200 VAC	4 to 8 VDC
Maximum load (3) current and range	5 to 50 mA	5 to 50 mA	5 to 25 mA	5 to 12.5 mA	20 mA
Internal circuit*	③	①			⑤
Contact protection circuit	None	Built-in			None
Internal voltage drop	2.4 V or less	2.4 V or less (Up to 20 mA)/3.5 V or less (Up to 50 mA)			0.8 V or less
Indicator light	Red LED illuminates when turned ON.				
Standard	CE/UKCA marking				

D-A6 (Without indicator light)				
Auto switch model	D-A64			D-A67
Applicable load	Relay, PLC			PLC/IC circuit
Load voltage	24 V AC/DC or less	100 VAC	200 VAC	Max. 24 VDC
Maximum load current	50 mA	25 mA	12.5 mA	30 mA
Internal circuit*	②			④
Contact protection circuit	Built-in			None
Internal resistance	25 Ω or less			1 Ω or less (Including lead wire length of 3 m)
Standard	CE/UKCA marking			

Oilproof Heavy-duty Lead Wire Specifications

Auto switch model		D-A53/A54	D-A56	D-A64/A67
Sheath	Outside diameter [mm]	ø4		
Insulator	Number of cores	2 cores (Brown/Blue)	3 cores (Brown/Blue/Black)	2 cores (Brown/Blue)
	Outside diameter [mm]	ø1.22		
Conductor	Effective area [mm²]	0.3	0.2	0.3
	Strand diameter [mm]	ø0.08		
Lead wire minimum bending radius [mm] (Reference values)		24		

∗ Refer to the applicable internal circuit diagram (numbers ① to ⑦) on page 1301.
Note 1) Refer to page 1298 for reed auto switch common specifications.
Note 2) Refer to page 1298 for lead wire lengths.
Note 3) Under 5 mA, the strength of the indicator light is poor. In some cases, visibility of the indicator light will not be possible where the output signal is less than 2.5 mA. However, there is no problem in terms of contact output, when an output signal exceeds 1 mA or more.
Note 4) The auto switches can operate at 12 VDC, but consider the internal voltage drop of the auto switch described in Reed Auto Switch Precautions on page 18.

Weight

(g)

Auto switch model		D-A53	D-A54	D-A56	D-A64	D-A67
Lead wire length	0.5 m (**Nil**)	24		24	24	
	3 m (**L**)	80		80	80	
	5 m (**Z**)	125		—	—	

Dimensions

(mm)

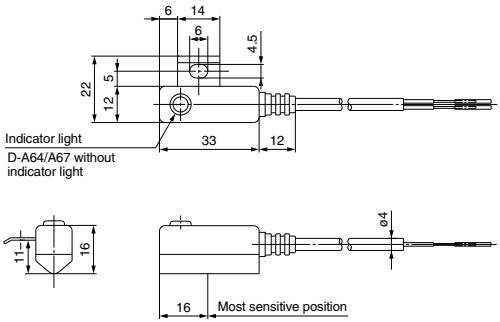

Reed Auto Switch
Tie-rod Mounting Type
D-A33C/D-A34C/D-A44C

Refer to SMC website for the details of the products conforming to the international standards.

Terminal conduit:D-A3□C
DIN terminal: D-A44C

⚠Caution

Precautions

1. Do not drop or bump the auto switch while handling it as it may result in the auto switch breaking.
2. Use cable whose O.D. is within the size in the figure to maintain water resistant performance.
3. After wiring, confirm that tightening gland and all screws are tightened.

Auto Switch Specifications

PLC: Programmable Logic Controller

D-A3□C (With indicator light) Terminal conduit				
Auto switch model	**D-A33C**	**D-A34C**		
Applicable load	PLC	Relay, PLC		
Load voltage	24 VDC (3)	24 VDC (3)	100 VAC	200 VAC
Load current range (2)	5 to 50 mA	5 to 50 mA	5 to 25 mA	5 to 12.5 mA
Internal circuit*	③	①		
Contact protection circuit	None	Built-in		
Internal voltage drop	2.4 V or less	2.4 V or less (Up to 20 mA)/3.5 V or less (Up to 50 mA)		
Indicator light	Red LED illuminates when turned ON.			
Standard	CE/UKCA marking			

D-A44C (With indicator light) DIN terminal			
Auto switch model	**D-A44C**		
Applicable load	Relay, PLC		
Load voltage	24 VDC (3)	100 VAC	200 VAC
Load current range (2)	5 to 50 mA	5 to 25 mA	5 to 12.5 mA
Internal circuit*	①		
Contact protection circuit	Built-in		
Internal voltage drop	2.4 V or less (Up to 20 mA)/3.5 V or less (Up to 50 mA)		
Indicator light	Red LED illuminates when turned ON.		
Standard	CE/UKCA marking		

* Refer to the applicable internal circuit diagram (numbers ① to ⑦) on page 1301.
Note 1) Refer to page 1298 for reed auto switch common specifications.
Note 2) Under 5 mA, the strength of the indicator light is poor. In some cases, visibility of the indicator light will not be possible where the output signal is less than 2.5 mA. However, there is no problem in terms of contact output, when an output signal exceeds 1 mA or more.
Note 3) The auto switches can operate at 12 VDC, but consider the internal voltage drop of the auto switch described in Reed Auto Switch Precautions on page 18.

Weight

(g)

Auto switch model	Applicable bore size(mm)	Weight
D-A33C-4, A34C-4	40	162
D-A33C-5, A34C-5	50	166
D-A33C-6, A34C-6	63	184
D-A33C-8, A34C-8	80	210
D-A33C-10, A34C-10	100	232

Auto switch model	Applicable bore size(mm)	Weight
D-A44C-4	40	160
D-A44C-5	50	164
D-A44C-6	63	182
D-A44C-8	80	208
D-A44C-10	100	230

Dimensions

(mm)

Auto switch model	Applicable bore size (mm)	C	HW	H	H'	T	T'	Z
D-A3□C-4, D-A44C-4	40	44	69	58 (67.5)	50.5 (60)	7.5	6.5	M5 x 0.8 x 16
D-A3□C-5, D-A44C-5	50	52	77	59 (68.5)	51.5 (61)	8.5	6.5	
D-A3□C-6, D-A44C-6	63	64	91	61.5 (71)	53 (62.5)	10.5	7.5	M5 x 0.8 x 20
D-A3□C-8, D-A44C-8	80	78	107	65 (74.5)	54.5 (64)	12.5	9.5	M5 x 0.8 x 25
D-A3□C-10, D-A44C-10	100	92	121	68 (77.5)	57.5 (67)	15.5	9.5	

* ( ): Denotes the values of D-A44C

Dimensions

(mm)

D-A3□C

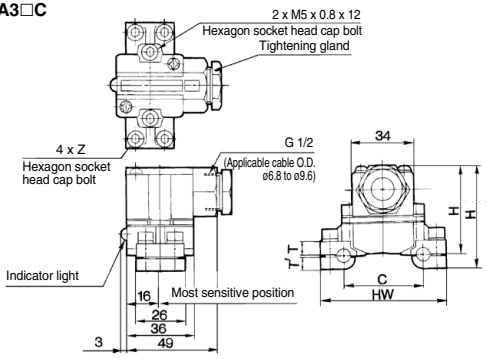

D-A44C

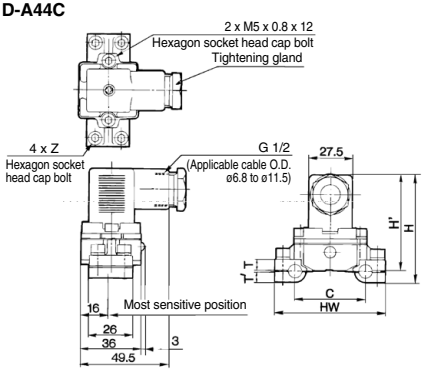

Reed Auto Switch
Direct Mounting Type
D-Z73/D-Z76/D-Z80

Refer to SMC website for the details of the products conforming to the international standards.

Grommet

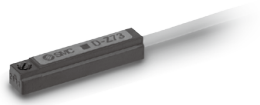

⚠Caution

Precautions

1. Do not drop or bump the auto switch while handling it as it may result in the auto switch breaking.
2. Do not remove the protective cover attached to the product body until the product is ready to be mounted on the actuator.
3. Fix the auto switch with the existing screw installed on the auto switch body. The auto switch may be damaged if a screw other than the one supplied is used.

Auto Switch Specifications

PLC: Programmable Logic Controller

D-Z7 (With indicator light)			
Auto switch model	D-Z73		D-Z76
Applicable load	Relay, PLC		IC circuit
Load voltage	24 VDC (4)	100 VAC	4 to 8 VDC
Max. load current and load current range(3)	5 to 40 mA	5 to 20 mA	20 mA
Internal circuit*	③		⑤
Contact protection circuit	None		
Internal voltage drop	2.4 V or less (Up to 20 mA)/3 V or less (Up to 40 mA)		0.8 V or less
Indicator light	Red LED illuminates when turned ON.		
Standard	CE/UKCA marking		

D-Z8 (Without indicator light)			
Auto switch model	D-Z80		
Applicable load	Relay, PLC, IC circuit		
Load voltage	24 V^{AC}_{DC} or less	48 V^{AC}_{DC}	100 V^{AC}_{DC}
Maximum load current	50 mA	40 mA	20 mA
Internal circuit*	④		
Contact protection circuit	None		
Internal resistance	1 Ω or less (Including 3 m lead wire)		
Standard	CE/UKCA marking		

Oilproof Heavy-duty Lead Wire Specifications

Auto switch model		D-Z73	D-Z76	D-Z80
Sheath	Outside diameter [mm]	ø2.7	ø3.4	ø2.7
Insulator	Number of cores	2 cores (Brown/Blue)	3 cores (Brown/Blue/Black)	2 cores (Brown/Blue)
	Outside diameter [mm]	ø1.1		
Conductor	Effective area [mm²]	0.18	0.2	0.18
	Strand diameter [mm]	ø0.08		
Lead wire minimum bending radius [mm] (Reference values)		17	21	17

* Refer to the applicable internal circuit diagram (numbers ① to ⑦) on page 1301.
Note 1) Refer to page 1298 for reed auto switch common specifications.
Note 2) Refer to page 1298 for lead wire lengths.
Note 3) Under 5 mA, the strength of the indicator light is poor. In some cases, visibility of the indicator light will not be possible where the output signal is less than 2.5 mA. However, there is no problem in terms of contact output, when an output signal exceeds 1 mA or more.
Note 4) The auto switches can operate at 12 VDC, but consider the internal voltage drop of the auto switch described in Reed Auto Switch Precautions on page 18.

Weight

(g)

Auto switch model		D-Z73	D-Z76	D-Z80
Lead wire length	0.5 m (**Nil**)	7	10	7
	3 m (**L**)	31	55	31
	5 m (**Z**)	50	—	—

Dimensions

(mm)

D-Z73, Z80

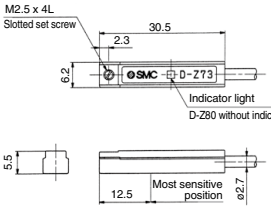

D-Z76

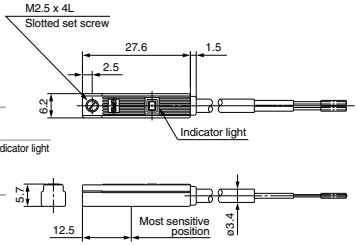

Reed Auto Switch
Direct Mounting Type
D-E73A/D-E76A/D-E80A

Refer to SMC website for the details of the products conforming to the international standards.

Grommet

⚠Caution

Precautions

Do not drop or bump the auto switch while handling it as it may result in the auto switch breaking.

Auto Switch Specifications

PLC: Programmable Logic Controller

D-E7□A (With indicator light)			
Auto switch model	D-E73A		D-E76A
Applicable load	Relay, PLC		IC circuit
Load voltage	24 VDC (4)	100 VAC	4 to 8 VDC
Max. load current and load current range(3)	5 to 40 mA	5 to 20 mA	20 mA
Internal circuit*	③		⑤
Contact protection circuit	None		
Internal voltage drop	2.4 V or less		0.8 V or less
Indicator light	Red LED illuminates when turned ON.		
Standard	CE/UKCA marking		

D-E80A (Without indicator light)			
Auto switch model	D-E80A		
Applicable load	Relay, PLC, IC circuit		
Load voltage	24 V AC/DC or less	48 V AC/DC	100 V AC/DC
Maximum load current	50 mA	40 mA	20 mA
Internal circuit*	④		
Contact protection circuit	None		
Internal resistance	1 Ω or less (Including lead wire length of 3 m)		
Standard	CE/UKCA marking		

Oilproof Heavy-duty Lead Wire Specifications

Auto switch model		D-E73A	D-E76A	D-E80A
Sheath	Outside diameter [mm]	ø3.4		
Insulator	Number of cores	2 cores (Brown/Blue)	3 cores (Brown/Blue/Black)	2 cores (Brown/Blue)
	Outside diameter [mm]	ø1.1		
Conductor	Effective area [mm²]	0.2		
	Strand diameter [mm]	ø0.08		
Lead wire minimum bending radius [mm] (Reference values)		21		

∗ Refer to the applicable internal circuit diagram (numbers ① to ⑦) on page 1301.
Note 1) Refer to page 1298 for reed auto switch common specifications.
Note 2) Refer to page 1298 for lead wire lengths.
Note 3) Under 5 mA, the strength of the indicator light is poor. In some cases, visibility of the indicator light will not be possible where the output signal is less than 2.5 mA. However, there is no problem in terms of contact output, when an output signal exceeds 1 mA or more.
Note 4) The auto switches can operate at 12 VDC, but consider the internal voltage drop of the auto switch described in Reed Auto Switch Precautions on page 18.

Weight

(g)

Auto switch model		D-E73A	D-E76A	D-E80A
Lead wire length	0.5 m (**Nil**)	10	11	10
	3 m (**L**)	47	55	47

Dimensions

(mm)

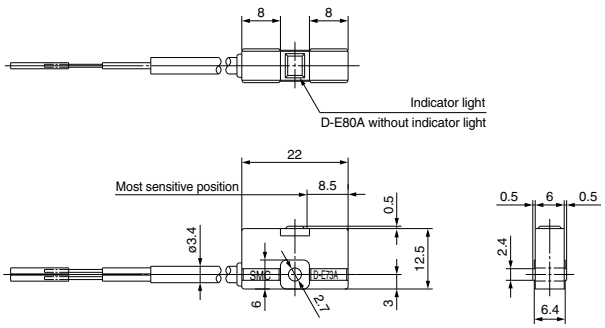

SMC

2-Color Indicator Reed Auto Switch Band Mounting Type
D-B59W

Refer to SMC website for the details of the products conforming to the international standards.

Grommet

The proper operating range can be determined by the color of the light.
(Red → Green ← Red)

⚠Caution

Precautions

Do not drop or bump the auto switch while handling it as it may result in the auto switch breaking.

Auto Switch Specifications

PLC: Programmable Logic Controller

D-B59W (With indicator light)	
Auto switch model	**D-B59W**
Applicable load	Relay, PLC
Load voltage	24 VDC
Load current range(3)	5 to 40 mA
Internal circuit*	⑥
Contact protection circuit	Built-in
Internal voltage drop	4 V or less
Indicator light	Operating range ····· Red LED illuminates. Proper operating range ····· Green LED illuminates.
Standard	CE/UKCA marking

Oilproof Heavy-duty Lead Wire Specifications

Auto switch model		D-B59W
Sheath	Outside diameter [mm]	ø4
Insulator	Number of cores	2 cores (Brown/Blue)
	Outside diameter [mm]	ø1.22
Conductor	Effective area [mm²]	0.3
	Strand diameter [mm]	ø0.08
Lead wire minimum bending radius [mm] (Reference values)		24

∗ Refer to the applicable internal circuit diagram (numbers ① to ⑦) on page 1301.
Note 1) Refer to page 1298 for reed auto switch common specifications.
Note 2) Refer to page 1298 for lead wire lengths.
Note 3) Under 5 mA, the strength of the indicator light is poor. In some cases, visibility of the indicator light will not be possible where the output signal is less than 2.5 mA. However, there is no problem in terms of contact output, when an output signal exceeds 1 mA or more.

Weight

(g)

Auto switch model		D-B59W
Lead wire length	0.5 m (**Nil**)	20
	3 m (**L**)	76

Dimensions

(mm)

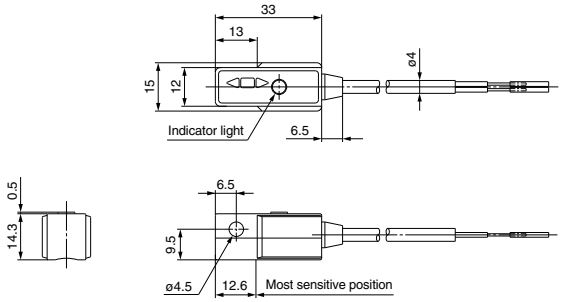

2-Color Indicator Reed Auto Switch Rail Mounting Type
D-A79W

Refer to SMC website for the details of the products conforming to the international standards.

Grommet

The proper operating range can be determined by the color of the light.
(Red → Green ← Red)

⚠Caution

Precautions

Do not drop or bump the auto switch while handling it as it may result in the auto switch breaking.

Auto Switch Specifications

PLC: Programmable Logic Controller

D-A79W (With indicator light)	
Auto switch model	**D-A79W**
Applicable load	Relay, PLC
Load voltage	24 VDC
Load current range (3)	5 to 40 mA
Internal circuit*	⑦
Contact protection circuit	None
Internal voltage drop	4 V or less
Indicator light	Operating range ····· Red LED illuminates. Proper operating range ····· Green LED illuminates.
Standard	CE/UKCA marking

Oilproof Heavy-duty Lead Wire Specifications

Auto switch model		**D-A79W**
Sheath	Outside diameter [mm]	ø3.4
Insulator	Number of cores	2 cores (Brown/Blue)
	Outside diameter [mm]	ø1.1
Conductor	Effective area [mm²]	0.2
	Strand diameter [mm]	ø0.08
Lead wire minimum bending radius [mm] (Reference values)		21

∗ Refer to the applicable internal circuit diagram (numbers ① to ⑦) on page 1301.
Note 1) Refer to page 1298 for reed auto switch common specifications.
Note 2) Refer to page 1298 for lead wire lengths.
Note 3) Under 5 mA, the strength of the indicator light is poor. In some cases, visibility of the indicator light will not be possible where the output signal is less than 2.5 mA. However, there is no problem in terms of contact output, when an output signal exceeds 1 mA or more.

Weight

(g)

Auto switch model		**D-A79W**
Lead wire length	0.5 m (**Nil**)	11
	3 m (**L**)	53

Dimensions

(mm)

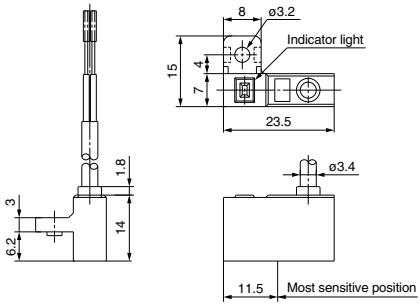

2-Color Indicator Reed Auto Switch
Tie-rod Mounting Type
D-A59W

Refer to SMC website for the details of the products conforming to the international standards.

Grommet

The proper operating range can be determined by the color of the light.
(Red → Green ← Red)

⚠Caution

Precautions

Do not drop or bump the auto switch while handling it as it may result in the auto switch breaking.

Auto Switch Specifications

PLC: Programmable Logic Controller

D-A59W (With indicator light)	
Auto switch model	**D-A59W**
Applicable load	Relay, PLC
Load voltage	24 VDC
Load current range(3)	5 to 40 mA
Internal circuit*	⑥
Contact protection circuit	Built-in
Internal voltage drop	4 V or less
Indicator light	Operating range ····· Red LED illuminates. Proper operating range ····· Green LED illuminates.
Standard	CE/UKCA marking

Oilproof Heavy-duty Lead Wire Specifications

Auto switch model		**D-A59W**
Sheath	Outside diameter [mm]	ø4
Insulator	Number of cores	2 cores (Brown/Blue)
	Outside diameter [mm]	ø1.22
Conductor	Effective area [mm²]	0.3
	Strand diameter [mm]	ø0.08
Lead wire minimum bending radius [mm] (Reference values)		24

∗ Refer to the applicable internal circuit diagram (numbers ① to ⑦) on page 1301.
Note 1) Refer to page 1298 for reed auto switch common specifications.
Note 2) Refer to page 1298 for lead wire lengths.
Note 3) Under 5 mA, the strength of the indicator light is poor. In some cases, visibility of the indicator light will not be possible where the output signal is less than 2.5 mA. However, there is no problem in terms of contact output, when an output signal exceeds 1 mA or more.

Weight

(g)

Auto switch model		**D-A59W**
Lead wire length	0.5 m (**Nil**)	25
	3 m (**L**)	80

Dimensions

(mm)

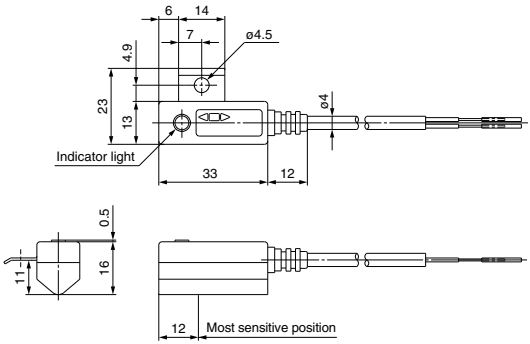

Magnetic Field Resistant 2-Color Indicator Reed Auto Switch

D-P79WSE

(Electrical Entry: Pre-wired connector)

Refer to SMC website for the details of the products conforming to the international standards.

Grommet

The proper operating range can be determined by the color of the light.
(Red → Green ← Red)

⚠Caution

Precautions

1. Do not drop or bump the auto switch while handling it as it may result in the auto switch breaking.
2. Cylinder with a strong integrated magnet must be used.

Auto Switch Specifications

PLC: Programmable Logic Controller

Auto switch model	D-P79WSE
Applicable load	PLC
Load voltage	24 VDC
Load current range	8 to 20 mA
Internal circuit*	⑥
Contact protection circuit	Built-in
Internal voltage drop	6 V or less
Indicator light	Operating range ····· Red LED illuminates. Proper operating range ····· Green LED illuminates.
Standard	CE/UKCA marking

Oilproof Heavy-duty Lead Wire Specifications

Auto switch model		D-P79WSE
Sheath	Outside diameter [mm]	ø6
Insulator	Number of cores	2 cores
	Outside diameter [mm]	ø2.3
Conductor	Effective area [mm²]	0.5
	Strand diameter [mm]	ø0.08
Lead wire minimum bending radius [mm] (Reference values)		48

∗ Refer to the applicable internal circuit diagram (numbers ① to ⑦) on page 1301.
Note 1) Refer to page 1298 for reed auto switch common specifications.

Weight

(g)

Auto switch model	D-P79WSE
	100

Dimensions

(mm)

D-P79WSE

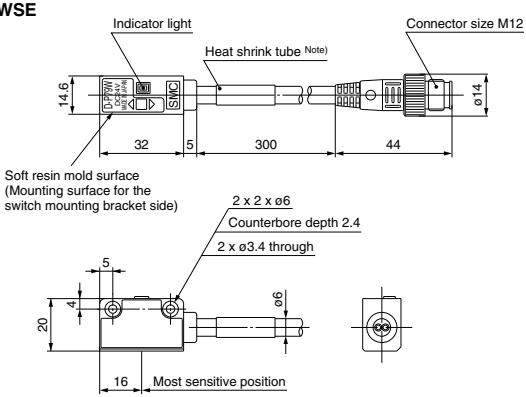

Note) D-P79WSE = "SE 1 4-"

⚠Caution

Please be careful of the mounting direction.
The soft resin mold surface must be directed to the switch mounting bracket side.

Magnetic Field Resistant Reed Auto Switch
D-P74

Refer to SMC website for the details of the products conforming to the international standards.

Grommet

⚠Caution

Precautions

1. Do not drop or bump the auto switch while handling it as it may result in the auto switch breaking.
2. Cylinder with a strong integrated magnet must be used.

Auto Switch Specifications

PLC: Programmable Logic Controller

D-P74L/Z (With indicator light)		
Auto switch model	**D-P74**	
Electrical entry	Grommet	
Application	Relay, PLC	
Load voltage	24 VDC	100 VAC
Max. load voltage/Load current range	5 to 40 mA	5 to 20 mA
Internal circuit*	①	
Contact protection circuit	Built-in	
Internal voltage drop (internal resistance)	2.4 V or less	
Leakage current	0	
Indicator light	Red LED illuminates when turned ON.	
Standard	CE/UKCA marking	

Oilproof Heavy-duty Lead Wire Specifications

Auto switch model		**D-P74**
Sheath	Outside diameter [mm]	ø6.8
Insulator	Number of cores	2 cores (White/Black)
	Outside diameter [mm]	ø1.1
Conductor	Effective area [mm²]	0.75
	Strand diameter [mm]	ø0.18
Lead wire minimum bending radius [mm] (Reference values)		48

* Refer to the applicable internal circuit diagram (numbers ① to ⑦) on page 1301.
Note 1) Refer to page 1298 for reed auto switch common specifications.
Note 2) Refer to page 1298 for lead wire lengths.
Note 3) Under 5 mA, the strength of the indicator light is poor. In some cases, visibility of the indicator light will not be possible where the output signal is less than 2.5 mA. However, there is no problem in terms of contact output, when an output signal exceeds 1 mA or more.

Weight

(g)

Auto switch model		**D-P74**
Lead wire length	0.5 m (**Nil**)	48
	3 m (**L**)	189
	5 m (**Z**)	320

Dimensions

(mm)

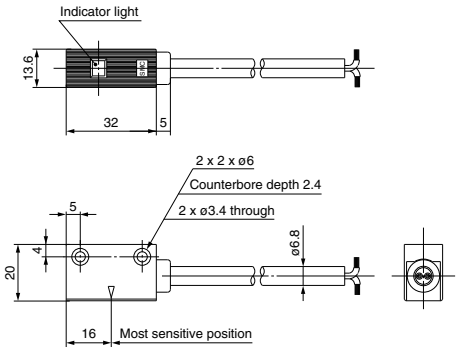

Magnetic Field Resistant Reed Auto Switch
D-P74-376

Refer to SMC website for the details of the products conforming to the international standards.

Grommet

⚠Caution

Precautions

1. Do not drop or bump the auto switch while handling it as it may result in the auto switch breaking.
2. Cylinder with a strong integrated magnet must be used.

Auto Switch Specifications

PLC: Programmable Logic Controller

D-P74-376 (With indicator light)	
Auto switch model	**D-P74-376**
Electrical entry	Grommet
Application	Relay, PLC
Load voltage	24 VDC
Max. load current/Load current range	5 to 20 mA
Internal circuit*	①
Contact protection circuit	Built-in
Internal voltage drop (internal resistance)	2 V or less
Leakage current	0
Operating time	1.2 ms
Indicator light	Red LED illuminates when turned ON.
Standard	CE/UKCA marking

Oilproof Heavy-duty Lead Wire Specifications

Auto switch model		**D-P74**
Sheath	Outside diameter [mm]	ø6
Insulator	Number of cores	2 cores
	Outside diameter [mm]	ø1.1
Conductor	Effective area [mm²]	0.75
	Strand diameter [mm]	ø0.18
Lead wire minimum bending radius [mm] (Reference values)		48

* Refer to the applicable internal circuit diagram (numbers ① to ⑦) on page 1301.
Note 1) Refer to page 1298 for reed auto switch common specifications.
Note 2) Under 5 mA, the strength of the indicator light is poor. In some cases, visibility of the indicator light will not be possible where the output signal is less than 2.5 mA. However, there is no problem in terms of contact output, when an output signal exceeds 1 mA or more.

Weight

(g)

Auto switch model	**D-P74-376**
	60

Dimensions

(mm)

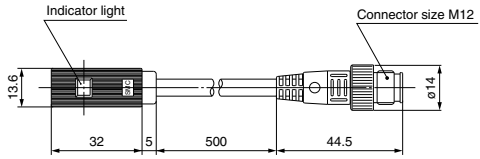

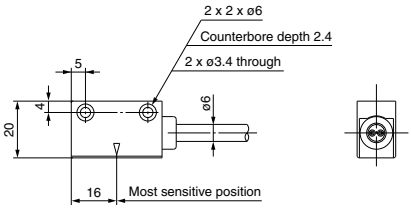

SMC

Heat Resistant Reed Auto Switch
D-B30(J)/31(J)/35(J)

Refer to SMC website for the details of the products conforming to the international standards.

Can be used outdoors or under high temperature (Max. 120°C). Wide operating range (double that of other SMC products) enables stable position detection.

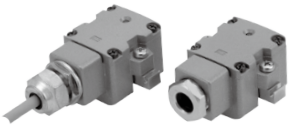

High temperature environment such as places around ignited gas outlet or furnace

Outdoor plants and environment with high temperature and humidity

Environment for steam cleaning or high temperature sterilization

Applications requiring wide operating range such as clamping of elastic work pieces

Use of metal case and heat resistant materials. The construction prevents influence of external environment by sealing the auto switch internal parts to improve heat resistance.
The wide operating range allows easy position setting and reduces influence of the work piece position changes.

⚠Caution

Precautions

Do not drop or bump the auto switch while handling it as it may result in the auto switch breaking.

Auto Switch Internal Circuit

D-B30

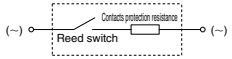

D-B31

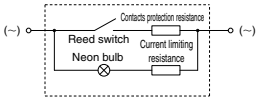

D-B35

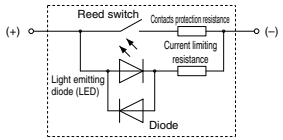

Auto Switch Specifications

PLC: Programmable Logic Controller

Auto switch model	D-B30	D-B30J	D-B31	D-B31J	D-B35	D-B35J
Electrical entry	Terminal conduit	Grommet	Terminal conduit	Grommet	Terminal conduit	Grommet
Operating voltage	24 VDC / 100 VAC		100 VAC		24 VDC	
Operating current range	5 to 30 mADC / 5 to 20 mAAC		5 to 20 mAAC		5 to 30 mADC	
Internal voltage drop	2.5 V or less		2.5 V or less		2.0 V or less	
Indicator light	Without indicator light		Neon bulb lights up when OFF		Red LED lights up when OFF	
Applicable load	PLC (Programmable Logic Controller)					
Shock resistance	300 m/s^2					
Leakage current	0.1 mA or less		1 mA or less		1 mA or less	
Lead wire	—	0.5 m	—	0.5 m	—	0.5 m
Enclosure	Terminal conduit : IEC60529 IP64 Grommet : IEC60529 IP67					
Withstand voltage	1500 VAC for 1 minute (between case and terminals or lead wires)					
Insulation resistance	50 MΩ or larger between case (ground) and lead wires (terminals)					
Operating temperature range	–10°C to 120°C					
Standard	CE/UKCA marking					

Oilproof Heavy-duty Lead Wire Specifications

Auto switch model		D-B30J	D-B31J	D-B35J
Sheath	Outside diameter [mm]	ø6		
Insulator	Number of cores	2 cores (Brown/Blue)		
	Outside diameter [mm]	ø2.3		
Conductor	Effective area [mm^2]	0.5		
	Strand diameter [mm]	ø0.08		
Lead wire minimum bending radius [mm] (Reference values)		48 (Room temperature)		

Weight

(g)

Auto switch model		D-B30	D-B30J	D-B31	D-B31J	D-B35	D-B35J
Lead wire length	None	190	—	190	—	190	—
	0.5 m (**Nil**)	—	250	—	250	—	250
	3 m (**L**)	—	268	—	268	—	268
	5 m (**Z**)	—	462	—	462	—	462

Lead wire length

In case of the grommet type (J type), the lead wire length is 0.5 m.
(No lead wire is attached to the terminal conduit type.)
3 m and 5 m types are available as a special order.

Dimensions

(mm)

Terminal conduit type D-B3□

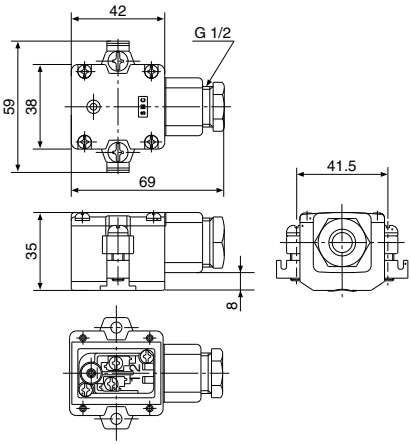

Terminal conduit type D-B3□J

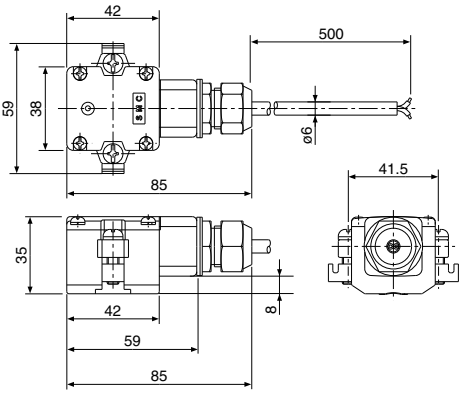

∗ Recommended minimum bending radius for lead wire RT : 25 mm or more
120°C : 50 mm or more

Dimensions for Cylinder Mounting

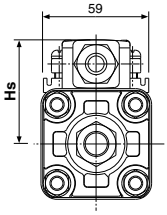

Hs dimensions

(mm)

Bore size	Cylinder model	
	CDA2	**MDB**
40 mm	58.5	57.5
50 mm	64	63
63 mm	71	69.5
80 mm	79.5	78.5
100 mm	90	89

Mounting cylinder part no.

CDA2 B 50 – 200 – B31J S – X1184

- **With built-in special magnet**
- **Number of auto switches**

Symbol	Description
Nil	2 pcs.
S	1 pc.

- **Cylinder stroke**
- **Cylinder bore size**
- **Auto switch type**

Symbol	Description
Nil	Without auto switch
B30	D-B30
B30J	D-B30J
B31	D-B31
B31J	D-B31J
B35	D-B35
B35J	D-B35J

- **Mounting**
- **Cylinder model**

Symbol	Description
CDA2	CDA2 series (Bore size 40 to 100)
MDB	MDB series (Bore size 40 to 100)

D-B3 Series
Specific Product Precautions

Be sure to read this before handling the products. For safety instructions and auto switch precautions, refer to the "Handling Precautions for SMC Products" and the "Operation Manual" on the SMC website: https://www.smcworld.com

⚠Caution

1. Use the reed switch within the operating range.

Take precautions about the ambient temperature because using the reed switch beyond the operating range may affect its internal electronic parts and sealing construction, causing abnormalities to the service life of the contact, as well as operation and waterproof performance of the switch.
Also, the maximum temperature of the environment where the switch is used must be fully understood before operation is started because the temperature of the environment where the auto switch is installed may experience some changes after operation is started due to factors other than air temperature such as influence of radiation heat from the heat source, air circulation or heat conduction.

2. Take precautions about the environment where the auto switch is installed.

If conditions (water splashes, time, temperature) beyond the normal ranges can be applied to the auto switch, use the auto switch in an environment where it will not be directly exposed to water splashes at a high temperature by installing a cover to protect the entire auto switch, as long as it is possible. The grommet type auto switch has a construction that will protect its internal parts against water splashes at the normal temperature. However, if the conditions (water splashes, time, temperature) exceed the normal ranges, they may adversely affect the auto switch internal insulation performance.
Also, confirm the applicability of the auto switch in the environment because extreme heat cycles or a long-term high humidity may cause functional deterioration of the auto switch protection construction.
In principle, the terminal conduit type must be used in an environment with no exposure to humidity or water because at high temperatures, it may become impossible to achieve sufficient waterproof effect due to deformation of lead wire sealant depending on the heat resistance of the lead wire and cable clamp.

3. Visibility of an indicator light

Because the auto switch uses light emitting diodes and neon bulbs for display, continuous operation at a high temperature may cause changes in characteristics of the entire display circuit. Also, the transparency of the display window on the body may change depending on the characteristics of the resin.
Because of the above factors, lighting under high temperature may become dark, causing decline of visibility.
However, there could be no problem in output of the signal itself and its safety owing to adoption of the OFF-state lighting system.

4. Take precautions about leakage current.

According to the heat resistant characteristics of its parts, the auto switch adopts the OFF-state lighting system (the indicator light lights up when the reed switch contact is open and goes off when the reed switch contact is closed).
Since the current for indicator lighting is running when the auto switch is off, confirm the allowable leakage current of PLC etc. before selecting the model.
If the leakage current of the indicator light becomes a problem for the PLC operation, select a model without an indicator light.

5. Keep the lead wire length as short as possible.

If a long lead wire is used because of the conditions of the plant or equipment where the switch is installed, malfunction in the reed switch reset operation may occur due to premature damage to the contact surface caused by the inrush current resulting from the line flotation capacity and influence of the electric field created by the power line near the wiring.
Therefore, the maximum wiring length should be kept at 100 m or less.
Avoid wiring in proximity with the power line. Also, if the length of wiring in use is extremely long (30 m or longer), schedule replacement in periodical maintenance.
The basic guidelines for replacement are a total wiring length of 100 m between the load and the auto switch and 1 million cycles of operation (at 120°C , 100 VAC PLC load).

6. Install the auto switch at the center of the operating range.

The operation range of the auto switch is set at approximately double that of the standard type in consideration of the mounting error when the detection position is set. However, this range is subject to change with the temperature. Although the variation in the operating range differs with the cylinder on which the auto switch is mounted, a temperature change of 100°C will roughly result in the maximum of 20% reduction in the overall operation range.
(Approximately 2 mm variation at the position where the auto switch usually turns on)
Therefore, install the auto switch at the center of the operating range (stable range), while understanding the possible change in the operating range and considering the stability of the auto switch operation.
(Avoid installation of the auto switch at the boundary where the auto switch turns on or off.)

7. Selection of applicable cylinders

The auto switch should be mounted on special cylinders (-X1184 series) because it is operated by magnets using heat resistant material.

8. Maintenance

After the auto switch is installed under high temperature, apply additonal tightening peiodically to the auto switch mounting band.
The rubber lining of the auto switch mounting band may need some time to adapt to the environment because of temperature chages in the installation environment. Perform additoinal tightening at a tightening torque of 2 to 3 N·m while carefully applying equal torque to both lifting screws.

9. Product upgrades

The product is subject to change without prior notice due to upgrades.