MS HYDRAULICS
Stainless Steel fittings

ДОРИНГ АЗИЯ

АДАПТЕРЫ

DIN 2353 - Iso 8434-1

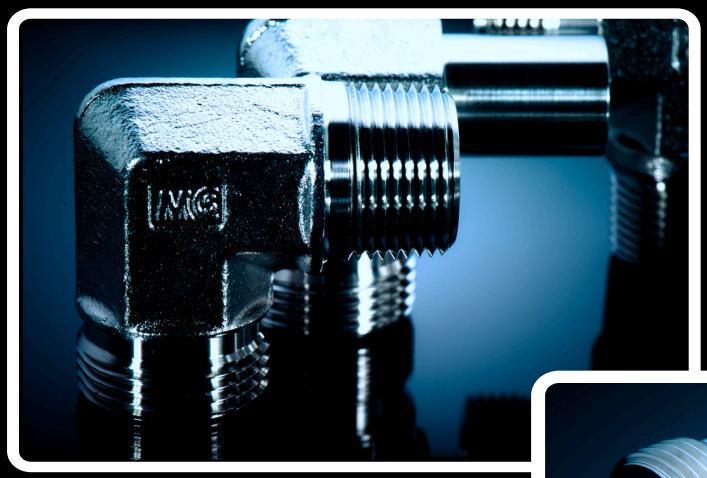

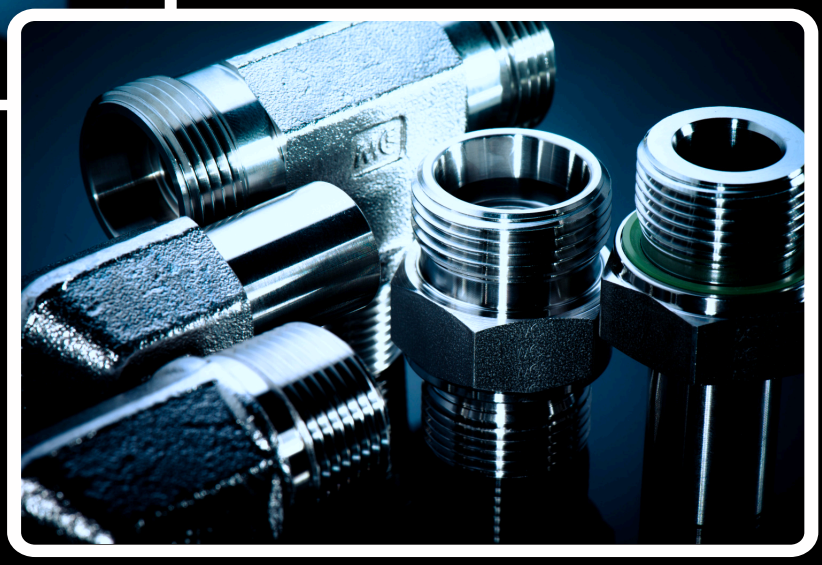

INDICE
INDEX

Pag. 5.1 - 5.2 - 5.3 - 5.4 - 5.5 - 5.6 - 5.7 - 5.8 - 5.9 - 5.10

INFORMAZIONI SUI PRODOTTI E DATI GENERALI
General Information

Pag. 5.11

ACCIAI IMPIEGATI
TRATTAMENTO DI FINITURA
Steel Used on all Series
Cleaning Process
Pag. 5.12

TRATTAMENTO TERMICO
LUBRIFICAZIONE DEI COMPONENTI
Heat Treatment
Lubrification of the components
Pag. 5.13

TABELLA COMPATIBILITÀ FLUIDI
Fluids Compatibility table

Pag. 5.14

TUBI IN ACCIAIO INOSSIDABILE CONSIGLIATI
Recommended Stainless Steel tubes

Pag. 5.15

GUARNIZIONI IMPIEGATE
TEMPERATURE AMMESSE E RIDUZIONI DI PRESSIONE
Sealing Materials
Pressure Reductions and Temperature

Pag. 5.16

RESPONSABILITÀ
Liability

Pag. 5.17

COLLAUDO
Testing

Pag. 5.18

COPPIE DI SERRAGGIO
Assembly Torques
Raccordi DIN 2353 con Filetto Gas Cilindrico
Stud Ends DIN 2353 with BSP Thread
Pag. 5.19

COPPIE DI SERRAGGIO
Assembly Torques
Raccordi DIN 2353 con Filetto Metrico Cilindrico
Stud Ends DIN 2353 with Metric Thread
Pag. 5.20

COPPIE DI SERRAGGIO
Assembly Torques
Raccordi DIN 2353 con Filetto Gas Conico
Stud Ends DIN 2353 with BSPT Thread
Pag. 5.21

COPPIE DI SERRAGGIO
Assembly Torques
Raccordi DIN 2353 con Filetto NPT
Stud Ends DIN 2353 with NPT Thread
Pag. 5.22

COPPIE DI SERRAGGIO
Assembly Torques
Raccordi DIN 2353 con Filetto Metrico Conico
Stud Ends DIN 2353 with Metric Taper Thread
Pag. 5.23

COPPIE DI SERRAGGIO
Assembly Torques
Raccordi DIN 2353 con Filetto UNF/UN-2A
Stud Ends DIN 2353 with UNF/UN-2A Thread
Pag. 5.24

COPPIE DI SERRAGGIO
Assembly Torques
Anello tagliente - Cono DIN 3861 per acciaio inox
Cutting Ring - DIN 3861 cone for Stainless Steel
Pag. 5.25

MISURE DEL CONO A NORMA DIN 3861
E DIAMETRO DEI FILETTI A NORMA DIN 3853
Definition of cone size to DIN 3861 Standards
Thread Diameters to DIN 3853 Standards
Pag. 5.26

ISTRUZIONI DI MONTAGGIO
ASSEMBLY INSTRUCTIONS
Pag. 5.27

1- Avvertenze
1 - Warning
Pag. 5.28

2 - Preparazione del tubo
2 - Tube preparation
Pag. 5.29 - 5.30 - 5.31

3 - Preparazione al montaggio
3 - Material preparation
Pag. 5.32

4 - Montaggio raccordo
4 - Assembly process
Pag. 5.33

Modo A - Montaggio diretto sul corpo del raccordo
Manual assembly direct in fitting
Pag. 5.34

Modo B - Montaggio mezzo punzone di pre-montaggio
Assembly using pre-assembly hardned tool
Pag. 5.35 - 5.36 - 5.37

Modo C - Montaggio mezzo macchina di pre-montaggio
Assembly using pre assembly machine

Pag. 5.38 - 5.39

5 - Controllo
5 - Assembly check

Pag. 5.40

6 - Montaggio finale
6 - Final installation

Pag. 5.41

7 - Montaggi ripetuti
7 - Repeated assemblies

8 - Coppie di Serraggio
8 - Assembly Torques

Pag. 5.42





ANELLO TAGLIENTE
CUTTING RINGS

Cod. CRLL..- CRLS..- CRL..- CRS ..
Cod. - CRL..Evo - CRS..Evo

Pag. 5.43

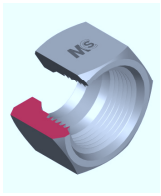

DADO
NUT

Cod. CNLL..- CNL..- CNS ..

Pag. 5.44

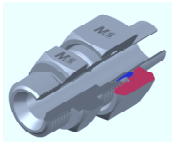

ADATTATORE MASCHIO DI ESTREMITÀ - SERIE L
Filetto Gas Cilindrico SV.60°
MALE STUD COUPLING - L SERIES
Bsp Parallel Thread 60° Cone

Cod. GE..LRG..B - GE..LRG..

Pag. 5.45

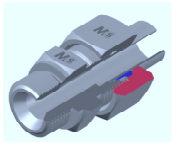

ADATTATORE MASCHIO DI ESTREMITÀ - SERIE S
Filetto Gas Cilindrico SV.60°
MALE STUD COUPLING - S SERIES
Bsp Parallel Thread 60° Cone

Cod. GE..SRG..B - GE..SRG..

Pag. 5.46

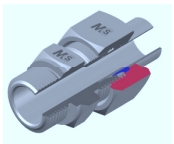

ADATTATORE MASCHIO DI ESTREMITÀ - SERIE L
Filetto Metrico Cilindrico
MALE STUD COUPLING - L SERIES
Metric Parallel Thread

Cod. GE..LM..B - GE..LM..

Pag. 5.47

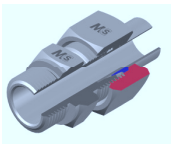

ADATTATORE MASCHIO DI ESTREMITÀ - SERIE S
Filetto Metrico Cilindrico
MALE STUD COUPLING - S SERIES
Metric Parallel Thread

Cod. GE..SM..B - GE..SM..

Pag. 5.48

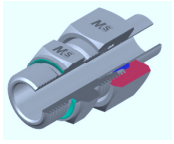

ADATTATORE MASCHIO DI ESTREMITÀ CON GUARNIZIONE PIANA - SERIE L
Filetto Gas Cilindrico
MALE STUD COUPLING WITH CAPTIVE SEAL - L SERIES
BSP Parallel Thread
Cod. GE..LRG..VB - GE..LRG..V

Pag. 5.49

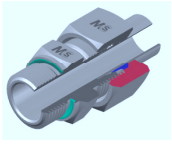

ADATTATORE MASCHIO DI ESTREMITÀ CON GUARNIZIONE PIANA - SERIE S
Filetto Gas Cilindrico
MALE STUD COUPLING WITH CAPTIVE SEAL - S SERIES
BSP Parallel Thread
Cod. GE..SRG..VB - GE..SRG..V

Pag. 5.50

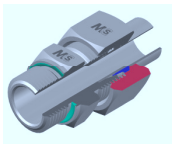

ADATTATORE MASCHIO DI ESTREMITÀ CON GUARNIZIONE PIANA - SERIE L
Filetto Metrico Cilindrico
MALE STUD COUPLING WITH CAPTIVE SEAL - L SERIES
Metric Parallel Thread
Cod. GE..LM..VB - GE..LM..V

Pag. 5.51

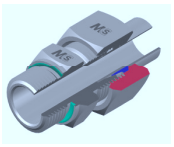

ADATTATORE MASCHIO DI ESTREMITÀ CON GUARNIZIONE PIANA - SERIE S
Filetto Metrico Cilindrico
MALE STUD COUPLING -WITH CAPTIVE SEAL - S SERIES
Metric Parallel Thread
Cod. GE..SM..VB - GE..SM..V

Pag. 5.52

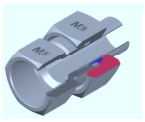

ADATTATORE FEMMINA DI ESTREMITÀ - SERIE L/S
Filetto Gas Cilindrico
FEMALE STUD COUPLING - L/S SERIES
BSP Parallel Thread
Cod. GAI..LRG..B - GAI..LRG..
Cod. GAI..SRG..B - GAI..SRG..

Pag. 5.53

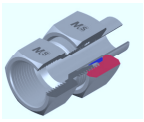

ADATTATORE FEMMINA DI ESTREMITÀ - SERIE L/S
Filetto Metrico Cilindrico
FEMALE STUD COUPLING - L/S SERIES
Metric Parallel Thread
Cod. GAI..LM..B - GAI..LM..
Cod. GAI..SM..B - GAI..SM..

Pag. 5.54

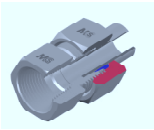

ADATTATORE FEMMINA DI ESTREMITÀ - SERIE L/S
Filetto NPT
FEMALE STUD COUPLING - L/S SERIES
NPT Thread
Cod. GAI..NPTB - GAI..NPT

Pag. 5.55

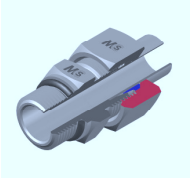

ADATTATORE MASCHIO DI ESTREMITÀ CON O'RING - SERIE L
Filetto UNF
MALE STUD COUPLING WITH O'RING - L SERIES
UNF Thread
Cod. GE..L..UNFB - GE..L..UNF

Pag. 5.56

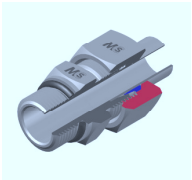

ADATTATORE MASCHIO DI ESTREMITÀ CON O'RING - SERIE S
Filetto UNF
MALE STUD COUPLING WITH O'RING - S SERIES
UNF Thread
Cod. GE..S..UNFB - GE..S..UNF

Pag. 5.57

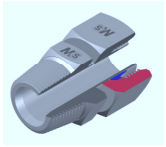

ADATTATORE DI ESTREMITÀ PREMONTATO - SERIE L
Filetto NPT
STUD STANDPIPE COUPLING - L SERIES
NPT Thread
Cod. EVGE..L..NPTB - EVGE..L..NPT

Pag. 5.58

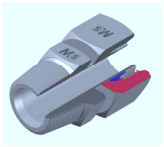

ADATTATORE DI ESTREMITÀ PREMONTATO - SERIE S
Filetto NPT
STUD STANDPIPE COUPLING - S SERIES
NPT Thread
Cod. EVGE..S..NPTB - EVGE..S..NPT

Pag. 5.59

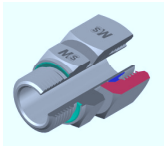

ADATTATORE DI ESTREMITÀ PREMONTATO CON GUARNIZIONE PIANA - SERIE L
Filetto Gas Cilindrico
STUD STANDPIPE COUPLING WITH CAPTIVE SEAL - L SERIES
BSP Parallel Thread
Cod. EVGE..LG..VB - EVGE..LG..V

Pag. 5.60

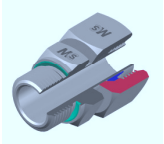

ADATTATORE DI ESTREMITÀ PREMONTATO CON GUARNIZIONE PIANA - SERIE S
Filetto Gas Cilindrico
STUD STANDPIPE COUPLING WITH CAPTIVE SEAL - S SERIES
BSP Parallel Thread
Cod. EVGE..SG..VB - EVGE..SG..V

Pag. 5.61

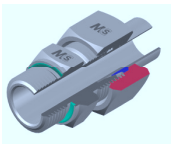

ADATTATORE DI ESTREMITÀ PREMONTATO CON GUARNIZIONE PIANA - SERIE L
Filetto Metrico Cilindrico
STUD STANDPIPE COUPLING WITH CAPTIVE SEAL - L SERIES
Metric Parallel Thread
Cod. EVGE..LM..VB - EVGE..LM..V

Pag. 5.62

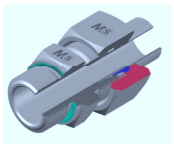

ADATTATORE DI ESTREMITÀ PREMONTATO CON GUARNIZIONE PIANA - SERIE S
Filetto Metrico Cilindrico
STUD STANDPIPE COUPLING WITH CAPTIVE SEAL - S SERIES
Mtric Parallel Thread
Cod. EVGE..SM..VB - EVGE..SM..V

Pag. 5.63

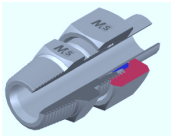

ADATTATORE MASCHIO DI ESTREMITÀ - SERIE L
Filetto Gas Conico
MALE STUD COUPLING - L SERIES
BSP Taper Thread

Cod. GE..L..BSPTB - GE..L..BSPT

Pag. 5.64

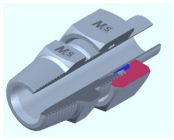

ADATTATORE MASCHIO DI ESTREMITÀ - SERIE S
Filetto Gas Conico
MALE STUD COUPLING - S SERIES
BSP Taper Thread

Cod. GE..S..BSPTB - GE..S..BSPT

Pag. 5.65

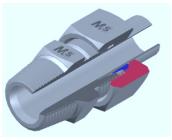

ADATTATORE DI MASCHIO DI ESTREMITÀ - SERIE L
Filetto NPT
MALE STUD COUPLING - L SERIES
NPT Thread

Cod. GE..L..NPTB - GE..L..NPT

Pag. 5.66

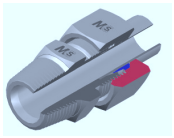

ADATTATORE DI MASCHIO DI ESTREMITÀ - SERIE S
Filetto NPT
MALE STUD COUPLING - S SERIES
NPT Thread

Cod. GE..S..NPTB - GE..S..NPT

Pag. 5.67

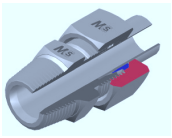

DIRITTO DI ESTREMITÀ
Filetto Metrico Conico
MALE STUD COUPLING
Metric Taper Thread

Cod. GE..LM..B - GE..SM..B - GE..LM.. - GE..SM..

Pag. 5.68

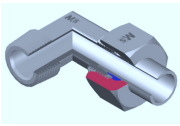

ADATTATORE MASCHIO DI ESTREMITÀ A GOMITO - SERIE L
Filetto Gas Conico
MALE STUD ELBOW - L SERIES
BSP Taper Thread

Cod. LE..L..BSPTB - LE..L..BSPT

Pag. 5.69

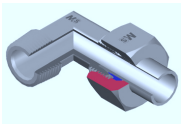

ADATTATORE MASCHIO DI ESTREMITÀ A GOMITO- SERIE S
Filetto Gas Conico
MALE STUD ELBOW - S SERIES
BSP Taper Thread

Cod. LE..S..BSPTB - LE..S..BSPT

Pag. 5.70

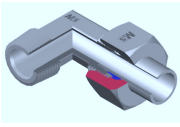

ADATTATORE MASCHIO DI ESTREMITÀ A GOMITO - SERIE L
Filetto NPT
MALE STUD ELBOW - L SERIES
NPT Thread

Cod. LE..L..NPTB - LE..L..NPT

Pag. 5.71

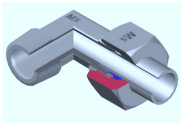

ADATTATORE MASCHIO DI ESTREMITÀ A GOMITO - SERIE S
Filetto NPT
MALE STUD ELBOW - S SERIES
NPT Thread

Cod. LE..S..NPTB - LE..S..NPT

Pag. 5.72

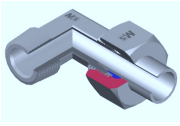

ADATTATORE MASCHIO DI ESTREMITÀ A GOMITO
Filetto Metrico Conico
MALE STUD ELBOW
Metric Taper Thread

Cod. LE..LM..B - LE..LM..

Pag. 5.73

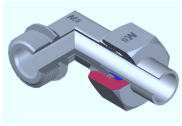

ADATTATORE MASCHIO DI ESTREMITÀ
Filetto Gas Cilindrico
MALE STUD ELBOW
BSP Parallel Thread

Cod. LE..LRG..B - LE..SRG..B - LE..LRG.. - LE..SRG..

Pag. 5.74

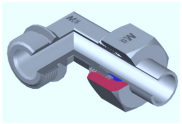

ADATTATORE MASCHIO DI ESTREMITÀ
Filetto Metrico Cilindrico
MALE STUD ELBOW
Metric Parallel Thread

Cod. LE..LM..B - LE..SM..B - LE..LM.. - LE..SM..

Pag. 5.75

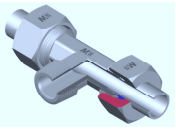

ADATTATORE MASCHIO DI ESTREMITÀ A T CENTRALE
Filetto Gas Conico
MALE STUD BRANCH TEE
BSP Taper Thread

Cod. TC..L..BSPTB - TC..S..BSPTB - TC..L..BSPT - TC..S..BSPT

Pag. 5.76

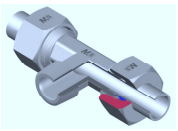

ADATTATORE MASCHIO DI ESTREMITÀ A T CENTRALE
Filetto NPT
MALE STUD BRANCH TEE
NPT Thread

Cod. TC..L..NPTB - TC..S..NPTB - TC..LNPT - TC..S..NPT

Pag. 5.77

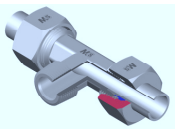

ADATTATORE MASCHIO DI ESTREMITÀ A T CENTRALE
Filetto Metrico Cilindrico
MALE STUD BRANCH TEE
Metric Taper Thread

Cod. TC..LM..B - TC..SM..B - TC..LM.. - TC..SM..

Pag. 5.78

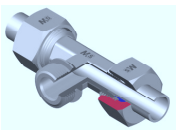

ADATTATORE MASCHIO DI ESTREMITÀ A T CENTRALE
Filetto Gas Cilindrico
MALE STUD BRANCH TEE
BSP Parallel Thread

Cod. TC..LRG..B - TC..SRG..B - TC..LRG.. - TC..SRG..

Pag. 5.79

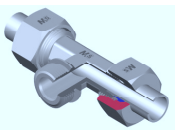

ADATTATORE MASCHIO DI ESTREMITÀ A T CENTRALE
Filetto Metrico Cilindrico
MALE STUD BRANCH TEE
Metric Parallel Thread

Cod. TC..LM..B - TC..SM..B - TC..LM.. - TC..SM..

Pag. 5.80

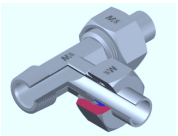

ADATTATORE MASCHIO DI ESTREMITÀ A T LATERALE
Filetto Gas Conico
MALE STUD BARREL TEE
Bsp Taper Thread

Cod. TL..L..BSPTB - TL..S..BSPTB - TL..L..BSPT - TL..S..BSPT

Pag. 5.81

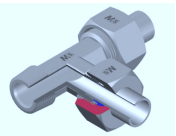

ADATTATORE MASCHIO DI ESTREMITÀ A T LATERALE
Filetto NPT
MALE STUD BARREL TEE
NPT Thread

Cod. TL..L..NPTB - TL..S..NPTB - TL..L..NPT - TL..S..NPT

Pag. 5.82

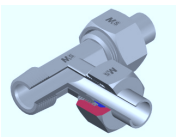

ADATTATORE MASCHIO DI ESTREMITÀ A T LATERALE
Filetto Metrico Conico
MALE STUD BARREL TEE
Metric Taper Thread

Cod. TL..LM..B - TL..SM..B - TL..LM.. - TL..SM..

Pag. 5.83

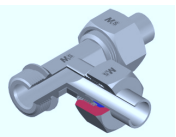

ADATTATORE MASCHIO DI ESTREMITÀ A T LATERALE
Filetto Gas Cilindrico
MALE STUD BARREL TEE
BSP Parallel Thread

Cod. TL..LRG..B - TL.SRG..B - TL..LRG.. - TL..SRG..

Pag. 5.84

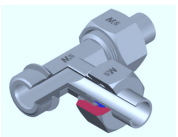

ADATTATORE MASCHIO DI ESTREMITÀ A T LATERALE
Filetto Metrico Cilindrico
MALE STUD BARREL TEE
Metric Parallel Thread

Cod. TL..LM..B - TL..SM..B - TL..LM.. - TL..SM..

Pag. 5.85

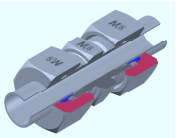

ADATTATORE MASCHIO INTERMEDIO STRAIGHT UNION COUPLING

Cod. GV..LB - GV..SB - GV..L - GV..S

Pag. 5.86

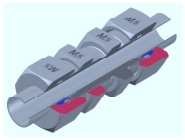

ADATTATORE INTERMEDIO
PASSAPARETE CON CONTRODADO
BULKHEAD STRAIGHT UNION
COUPLING WITH LOCKNUT

Cod. GSV..LB - GSV..SB - GSV..L - GSV..S

Pag. 5.87

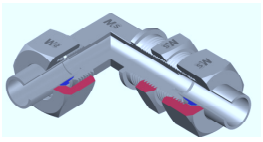

ADATTATORE INTERMEDIO
PASSAPARETE A GOMITO CON CONT.
BULKHEAD ELBOW
COUPLING WITH LOCKNUT

Cod. WSV..LB - WSV..SB - WSV..L - WSV..S

Pag. 5.88

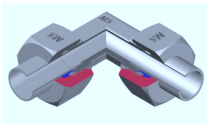

ADATTATORE MASCHIO INTERMEDIO
A GOMITO
MALE ELBOW UNION COUPLING

Cod. LV..LB - LV..SB - LV..L - LV..S

Pag. 5.89

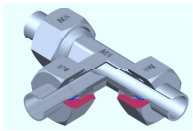

ADATTATORE MASCHIO
INTERMEDIO A T
MALE TEE UNION COUPLING

Cod. TV..LB - TV..SB - TV..L - TV..S

Pag. 5.90

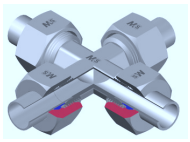

ADATTATORE MASCHIO
INTERMEDIO A CROCE
MALE CROSS STUD COUPLING

Cod. CRV..LB - CRV..SB - CRV..L - CR..S

Pag. 5.91

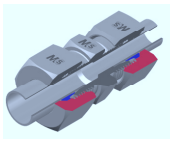

ADATTATORE MASCHIO
INTERMEDIO RIDOTTO - SERIE L
STRAIGHT REDUCING
MALE COUPLING - L SERIES

Cod. GRV..LB - GRV..L

Pag. 5.92

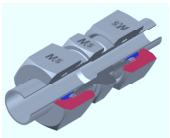

ADATTATORE MASCHIO
INTERMEDIO RIDOTTO - SERIE S
STRAIGHT REDUCING
MALE COUPLING - S SERIES

Cod. GRV..SB - GRV..S

Pag. 5.93

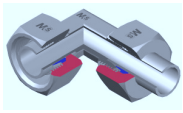

ADATTATORE A GOMITO DI
ESTREMITÀ A CODOLO
STUD STANDPIPE ELBOW

Cod. EVW..LB - EVW..SB -
EVW..L - EVW..S

Pag. 5.94

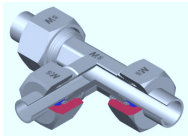

ADATTATORE INTERMEDIO
A T RIDOTTO - SERIE L
REDUCING TEE UNION
COUPLING - L SERIES

Cod. TRV..LB - TRV..L

Pag. 5.95

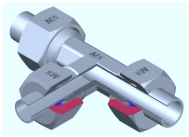

ADATTATORE INTERMEDIO
A T RIDOTTO - SERIE S
REDUCING TEE UNION
COUPLING - S SERIES

Cod. TRV..SB - TRV..S

Pag. 5.96

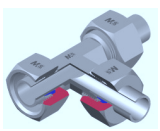

ADATTATORE DI ESTREMITÀ
A T LATERALE A CODOLO
STUD STANDPIPE BARREL TEE

Cod. TLW..LB - TLW..SB -
TLW..L - TLW..S

Pag. 5.97

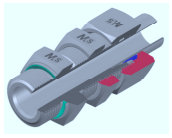

ADATTATORE TERMINALE
PASSAPARETE CON CONTRODADO
E GUARNIZIONE
BULCKHEAD STUD COUPLING WITH
LOCKNUT AND CAPTIVE SEAL

Cod. GSV..L..VB - GSV..S..VB -
GSV..L..V - GSV..S..V

Pag. 5.98

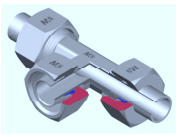

ADATTATORE DI ESTREMITÀ
A T CENTRALE A CODOLO
STUD STANDPIPE BRANCH TEE

Cod. TCVW..LB - TCVW..SB -
TCVW..L - TCVW..S

Pag. 5.99

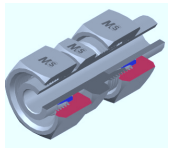

ADATTATORE DI RIDUZIONE
A CODOLO - SERIE L
REDUCING STANDPIPE
COUPLING - L SERIES

Cod. EVGE..LB - EVGE..L

Pag. 5.100

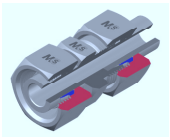

ADATTATORE DI RIDUZIONE
A CODOLO - SERIE S
REDUCING STANDPIPE
COUPLING - S SERIES

Cod. EVGE..SB - EVGE..S

Pag. 5.101

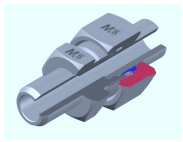

ADATTATORE MASCHIO DI
ESTREMITÀ -A SALDARE
WELD ON STRAIGHT MALE
COUPLING (WELDING BOSS)

Cod. WB..LB - WB..SB - WB..L - WB..S

Pag. 5.102

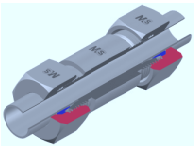

PASSAPARETE A SALDARE
WELD ON BULKHEAD
STRAIGHT COUPLING

Cod. WBC..LB - WBC..SB -
WBC..L - WBC..S

Pag. 5.103

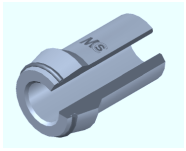

CODOLO A SALDARE CON O'RING
WELD ON NIPPLE WITH O'RING

Cod. OSM..

Pag. 5.104

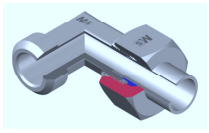

ADATTATORE MASCHIO DI
ESTREMITÀ A GOMITO A SALDARE
WELD ON MALE STUD ELBOW

Cod. WA..LB - WA..SB - WA..L - WA..S

Pag. 5.105



TAPPO CON O'RING
PLUG WITH O'RING

Cod. TM..L - TM..S

Pag. 5.106

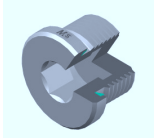

TAPPO MASCHIO ESAGONO
INCASSATO CON GUARNIZIONE PIANA
Filetto Gas Cilindrico
MALE PLUG INNER HEXAGON AND
CAPTIVE SEAL
BSP Parallel Thread

Cod. BSPMIP..

Pag. 5.107

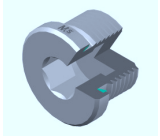

TAPPO MASCHIO ESAGONO
INCASSATO CON GUARNIZIONE PIANA
Filetto Metrico Cilindrico
MALE PLUG INNER HEXAGON AND
CAPTIVE SEAL
Metrico Parallel Thread

Cod. MIP..

Pag. 5.107

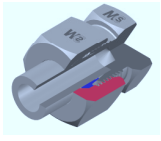

TAPPO MASCHIO SV. 24°
MALE PLUG 24° CONE

Cod. MMHP..LB - MMHP..SB
MMHP..L - MMHP..S

Pag. 5.108

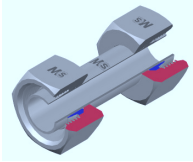

ADATTATORE FEMMINA INTERMEDIO
STRAIGHT FEMALE UNION COUPLING

Cod. SFUC..LB - SFUC..SB -
SFUC..L - SFUC..S

Pag. 5.109

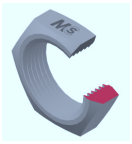

CONTRODADO PER ADATTATORE INTERMEDIO PASSAPARETE
LOCKNUT FOR BULCKHEAD STRAIGHT UNION COUPLING

Cod. GM..

Pag. 5.110

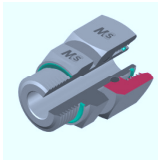

DIRITTO DI ESTREMITÀ CON DADO GIREVOLE E GUARNIZIONE PIANA
Filetto Gas Cilindrico
MALE STUD COUPLING WITH SWIVEL NUT AND CAPTIVE SEAL
BSP Parallel Thread

Cod. EGE..LG..V - EGE..SG..V

Pag. 5.111

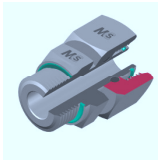

DIRITTO DI ESTREMITÀ CON DADO GIREVOLE E GUARNIZIONE PIANA
Filetto Metrico Cilindrico
MALE STUD COUPLING WITH SWIVEL NUT AND CAPTIVE SEAL
Metric Parallel Thread

Cod. EGE..LM..V - EGE..SM..V

Pag. 5.112

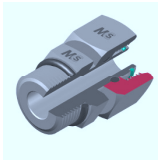

DIRITTO DI ESTREMITÀ CON DADO GIREVOLE E O'RING
Filetto UNF/UN-2A
MALE STUD COUPLING WITH SWIVEL NUT AND O'RING
Thread UNF/UN-2A

Cod. EGE..L..UNF - EGE..S..UNF

Pag. 5.113

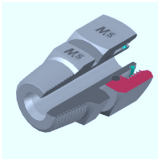

DIRITTO DI ESTREMITÀ CON DADO GIREVOLE
Filetto NPT
MALE STUD COUPLING WITH SWIVEL NUT
NPT Thread

Cod. EGE..L..NPT - EGE..S..NPT

Pag. 5.114

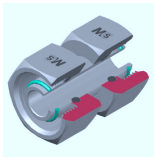

DIRITTO INTERMEDIO CON DADO GIREVOLE
STRAIGHT COUPLING WITH SWIVEL NUT

Cod. GZ..L - GZ..S

Pag. 5.115

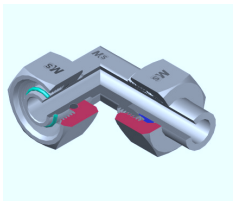

GOMITO ORIENTABILE CON DADO GIREVOLE
ADJUSTABLE MALE STUD ELBOW

Cod. EW..LB - EW..SB - EW..L - EW..S

Pag. 5.116

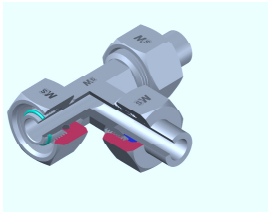

T LATERALE ORIENTABILE CON DADO GIREVOLE
ADJUSTABLE MALE STUD BARREL TEE

Cod. TLW..LB - TLW..SB -
TLW..L - TLW..S

Pag. 5.117

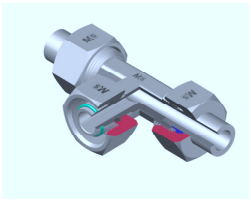

T CENTRALE ORIENTABILE CON DADO GIREVOLE
ADJUSTABLE MALE STUD BRANCH TEE

Cod. TCW..LB - TCW..SB -
TCW..L - TCW..S

Pag. 5.118

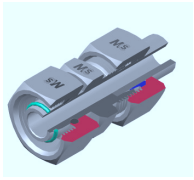

RIDUZIONE CODOLO CON DADO GIREVOLE - SERIE S
REDUCING TUBE ADAPTER WITH SWIVEL NUT - S SERIES

Cod. RED..LB - RED..L

Pag. 5.119

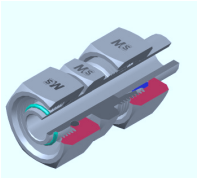

RIDUZIONE A CODOLO CON DADO GIREVOLE - SERIE S
REDUCING TUBE ADAPTER WITH SWIVEL NUT - S SERIES

Cod. RED..SB - RED..S

Pag. 5.120

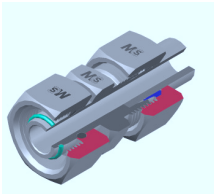

ADATTATORE A CODOLO CON DADO GIREVOLE - SERIE L/S
TUBE ADAPTER WITH SWIVEL NUT - L/S SERIES

Cod. EGE..LB - EGE..SB
EGE..L - EGE..S

Pag. 5.121

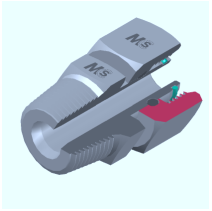

DIRITTO DI ESTREMITÀ CON DADO GIREVOLE
Filetto Gas Conico
MALE STUD COUPLING WITH SWIVEL NUT
BSP Taper Thread

Cod. EGE..L..BSPT - EGE..S..BSPT

Pag. 5.122

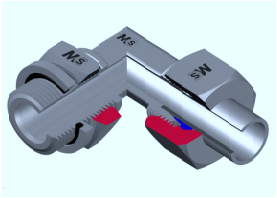

GOMITO ORIENTABILE CON O'RING E RONDELLA SPECIALE
Filetto Gas Cilindrico-Metrico Cilindrico
ADJUSTABLE MALE STUD ELBOW WITH O'RING AND SPECIAL WASHER
BSP Parallel Thread-Metric Parallel Thread

Cod. EW..SWB - EW..SW

Pag. 5.123

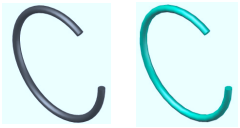

O'RING
O'RING

Cod. GOR..

Pag. 5.124



GUARNIZIONE PIANA
CAPTIVE SEAL

Cod. GTZ..V

Pag. 5.125



RONDELLA BONDED AUTOCENTRANTE
AISI 316
SELF CENTERING BONDED
AISI 316

Cod. BSSC..

Pag. 5.126

NOTE: *VITON® è un marchio registrato dalla DuPont Dow Elastomers*
NOTE: *VITON® is a DuPont Dow Elastomers Trade Mark*

INFORMAZIONE SUI PRODOTTI E DATI GENERALI
General Information

I raccordi ad anello tagliente M.C.S. Hydraulics, sono conformi alle normative ISO 8434-1 – DIN 2353.
Questi raccordi sono progettati per l'utilizzo su tubi metrici, e permettono di realizzare dei collegamenti efficaci ma smontabili, tra due diverse tubazioni.
L'ermeticità del prodotto è data dalla ormai consolidata ogiva a doppio tagliente, infatti, durante il serraggio provocato dall'avvitamento del dado, l'anello si deforma tramite la svasatura a 24° del raccordo, creando sul tubo due profonde incisione. La prima crea uno stabile risvolto di materiale, garantendo l'ermeticità ed il bloccaggio dell'anello sul tubo; la seconda, contribuisce a distribuire uniformemente la forze sull'intero cono, evitando che le vibrazioni raggiungano la prima.

Compression fittings manufactured by M.C.S. are based on ISO8434-1 and DIN 2353 standards.
These fittings are designed for metric tube, they make it possible to obtain a sealed but dismountable joint between two rigid tubes.
As the nut is tightened, the cutting ring is pushed into the 24°cone of the coupling, cutting the tube with both cutting edges.
After assembly a visible collar of cut tube material completely fill the space in front of the first cutting edge guaranteeing a hermetic seal; thanks to the second cutting edge all forces are equally distributed, this prevents vibration and flexure stresses.

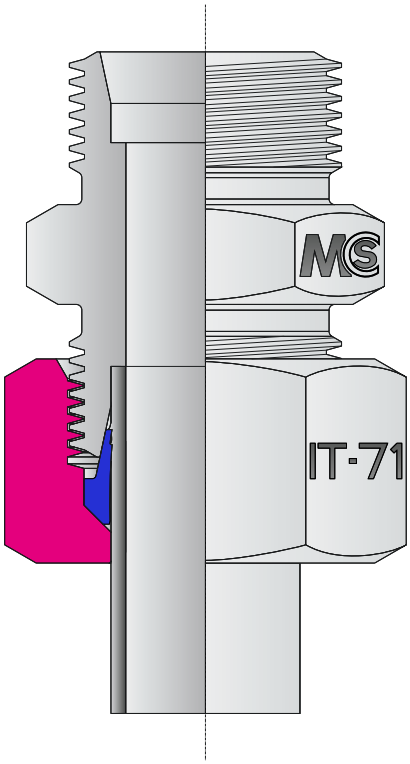

ACCIAI IMPIEGATI
Steel Used on all Series

Componenti Components	Materiale - Material		Normativa Reference Norm.
Anello - Ring	X6CrNiMoTi17-12-2 (1,4571)	X2CrNiMoTi17-12-2 (1,4404)	DIN 17440 EN 10088
Dado - Nut	X6CrNiMoTi17-12-2 (1,4571)	X2CrNiMoTi17-12-2 (1,4404)	DIN 17440 EN 10088
Corpo da barra Straight Body	X6CrNiMoTi17-12-2 (1,4571)	X2CrNiMoTi17-12-2 (1,4404)	DIN 17440 EN 10088
Corpo forgiato Forged Body	X6CrNiMoTi17-12-2 (1,4571)	X2CrNiMoTi17-12-2 (1,4404)	DIN 17440 EN 10088

TRATTAMENTO DI FINITURA
Cleaning Process

Processo di Lavaggio ad Ultrasuoni:

Tutti gli articoli prodotti dalla M.C.S. Hydraulics sono sottoposti ad un trattamento di lavaggio ed asciugatura ad ultrasuoni.
La M.C.S. Hydraulics utilizza un sistema di vasche di lavaggio ad ultrasuoni doppia frequenza con moduli di risciacquo ed asciugatura; le bolle di cavitazione generate dalle onde ultrasoniche, consentono la rimozione di impurità e residui, come polvere, olii, grassi, trucioli e bave di lavorazione che aderiscano alla superficie metallica, senza peraltro intaccare il materiale stesso.
La tecnologia del lavaggio con ultrasuoni è molto diffusa come sistema per la pulizia di gioielleria, nonché di dispositivi medici ed odontoiatrici e viene sempre più spesso utilizzata per il lavaggio industriale: al termine di tale processo il raccordo si presenta brillante, completamente pulito e sterilizzato e soprattutto si presta ad essere utilizzato per svariate applicazioni particolari.

Ultrasonic Cleaning:

Each item produced by M.C.S. Hydraulics is subjected to an ultrasonic cleaning treatment.
M.C.S. employs a cleaning device that uses Ultrasonic dual frequency waves and an appropriate cleaning
solvent, to clean each and every product.
Cavitation bubbles induced by the Ultrasound waves, act on a number of contaminants (Such as dirt, dust, grease etc.) adhering to metal.
This action also penetrates blind holes, cracks, and recesses; the intention is to remove all traces of contamination from surface .
Ultrasonics are used for industrial cleaning, but also in many medical and dental techniques: at the end of this process, fittings are bright, completely cleaned, sterilized and ready to be used even for very particular applications.

TRATTAMENTO TERMICO
Heat treatment

Nella gamma di adattatori DIN 2353, il principio di funzionamento dell'anello di tenuta, si basa sull'adesione e sull'incisione dell'anello sul tubo, ma la durezza degli acciai inox austenitici (AISI 316) è contenuta, perciò questi materiali sono troppo teneri per poter incidere la condotta in modo efficiente; pertanto, l'anello subisce un trattamento di nitrurazione ionica che gli conferisce un elevata tenacità, durezza superficiale e resistenza alla corrosione, facendogli perdere inoltre parte della loro amagneticità.

The functioning of the cutting ring for adapters DIN 2353 consists in sealing the ring on the tube, but because the hardness of austenitic stainless steel (AISI 316) is restrained, these materials are too stretchy to carve efficiently. So the ring is subjected to a ionic nitriding which gives it toughness, outer hardness and resistance to corrosion, this process at the same time eliminates part of its a-magneticity

LUBRIFICAZIONE DEI COMPONENTI
Lubrication of the components

Per un corretto impiego dei nostri adattatori, è necessario eseguire una corretta lubrificazione su tutti i componenti da montare. Il lubrificante che vi consigliamo rappresenta l'ultima generazione di lubrificanti sintetici, esso è costituito da particelle ultrafini di lubrificanti solidi inorganici, il tutto in un composto sintetico che vi permetterà di impiegarlo con temperature e pressioni estremamente elevate, infatti, non solidificherà nell'impiego tra -34°C e 1204°C e garantirà una tenuta ottimale fino a 4730 kg/cm^2. Inoltre, è ecologico in quanto non contiene metalli pesanti velenosi che danneggerebbero il personale che vi entrerebbe in contatto. Il nostro ufficio tecnico sarà a vostra completa disposizione per qualsiasi informazione tecnica relativa al suddetto lubrificante.

It is necessary a correct lubrication of each component to use our adapters correctly. The lubricant we recommend belongs to the latest generation of synthetic lubricants; it is formed by a synthetic compound of very small particles of solid inorganic lubricants. It can be used at extremely high temperatures and pressures; in fact it does not solidify between -34°C and 1204°C and it guarantees an optimum seal until 4730 kg/cm². Besides, it is ecological because it does not contain noxious heavy metal which could be dangerous for people who come in contact with it. Our technical office will be at your disposal for further technical information.

TABELLA COMPATIBILITÀ FLUIDI
Fluids Compatibility table

Fluido	Acciaio Inox	NBR	VITON®	Fluido	Acciaio Inox	NBR	VITON®
Acetilene	O	N	N	Gas Naturale Non Trattato	O	N	N
Acetone	O	N	N	Gasolio	O	O	O
Acido Cloridrico	S	N	O	Glicerina	O	O	O
Acido Fosforico	N	N	S	Glicole	O	O	O
Acido Nitrico	S	N	S	Idrogeno	O	O	O
Acido Solforico	S	N	O	Iodio	O	S	O
Acqua	S	N	O	Kerosene	O	O	O
Acqua Distillata	O	O	O	Metano	O	O	O
Acqua Marina	S	O	O	Metanolo	O	O	O
Acqua Ossigenata	O	N	O	Nafta	O	O	O
Acquaragia	O	O	O	Neon	O	O	O
Ammoniaca Gassosa, Fredda	O	O	N	Olio	O	O	O
Ammoniaca Liquida	O	S	N	Olio da Riscaldamento	O	O	N
Anidride Carbonica	O	O	S	Olio dei Freni	O	N	O
Argo	O	O	O	Olio della Trasmissione	O	O	O
Aria	O	O	O	Olio Minerale	O	O	O
Aria compressa	O	O	O	Olio Minerale Naturale	O	S	O
ASTM-Oil, 1	O	O	O	Olio per Comandi Idraulici	O	O	O
ASTM-Oil, 2	O	O	O	Olio Vegetale	O	O	O
ASTM-Oil, 3	O	O	O	Ossido di Carbonio	O	O	N
Azoto	O	O	O	Ossigeno	O	N	O
Benzene	O	N	O	Ozono	O	N	O
Biossido di Zolfo	O	N	O	Pentano	O	O	O
Bisolfuro di Carbonio	O	N	O	Pentano Liquido	O	O	O
Butano	O	O	O	Propano	O	O	O
Cloro	O	N	O	Silicone	O	O	O
Elio	O	O	O	Stirene	O	S	O
Etano	O	O	N	Toluolo	O	N	S
Etere	O	O	N	Trielina	S	N	S
Gas Combustibile	O	O	S	Vapore	O	N	N
Gas Naturale	O	O	O	Xilolo	O	N	O

Legenda: O = Ottimo; S = Sufficiente; N = Non Raccomandato.
Legend : O = Excellent ; S = Sufficient ; N = Not Recommended

VITON® è un marchio registrato dalla DuPont Dow Elastomers
VITON® is a DuPont Dow Elastomers Trade Mark

TUBI IN ACCIAIO INOSSIDABILE CONSIGLIATI
Recommended Stainless Steel Tubes

Si consiglia l'uso di tubi in acciaio inossidabile calibrati e lucidati, trafilati a freddo senza saldatura, in AISI 316 Ti secondo la norma DIN 17458 o ASTM A269, con durezza massima sul diametro esterno di 85HRB. Le pressioni indicate nella tabella a seguire sono state rilevate in condizioni di carico costante e temperatura compresa tra i -20°C e i 120°C

The use of seamless stainless steel Aisi 316Ti (EN 1.4571) cold drawn, brightened tubes, according to DIN 17458 or ASTM A269, with maximum hardness on outer diameter of 85HRB is recommended. Pressure shown in the following table has been noticed in conditions of constant load and temperature between -20°C and 120°C.

Ø Tubo mm	Tolleranza mm	Spessore mm	Pressione DIN 2413-I Statico bar	Peso Kg/m	Ø Tubo mm	Tolleranza mm	Spessore mm	Pressione DIN 2413-I Statico bar	Peso Kg/m
4	±0,1	0,5	326	0,048	18	±0,08	1,5*	245	0,619
		1	544	0,076			2	326	0,801
6	±0,1	1	406	0,125			2,5	409	0,971
		1,5	572	0,169			3	426	1,128
		2	721	0,200	20	±0,08	2**	294	0,902
8	±0,1	1	347	0,225			2,5	368	1,095
		1,5	449	0,244			3	389	1,277
		2	572	0,301			3,5	444	1,446
		2,5	686	0,344			4	498	1,602
10	±0,1	1	294	0,225	22	±0,08	2**	267	1,001
		1,5	389	0,319			2,5	334	1,220
		2	498	0,401			3	401	1,427
		2,5	601	0,469	25	±0,08	2**	236	1,151
		3	694	0,526			2,5	294	1,408
12	±0,08	1*	245	0,275			3	352	1,653
		1,5	368	0,394			4	411	2,104
		2	426	0,500			4,5	456	2,310
		2,5	516	0,595	28	±0,08	2**	210	1,301
		3	601	0,676			2,5	263	1,596
		3,5	679	0,745			3	315	1,878
14	±0,08	1,5	315	0,469	30	±0,08	2**	175	1,402
		2	420	0,601			2,5	245	1,721
		2,5	452	0,720			3	294	2,028
		3	529	0,826			4	392	2,604
		3,5	601	0,920	35	±0,15	2**	168	2,222
15	±0,08	1,5	294	0,507			2,5	210	2,034
		2	392	0,651			3	252	2,403
		3	498	0,902			4	336	3,104
16	±0,08	1,5**	275	0,544	38	±0,15	3**	232	2,628
		2	368	0,702			4	310	3,405
		2,5	402	0,845			5	387	4,131
		3	471	0,977	42	±0,2	3**	210	2,929
							4	280	3,806

* *Per tubi a norma DIN 2353 utilizzare la boccola di rinforzo adeguata.*
** *Utilizzare solo con raccordi a norma SAE J514.*

**For tubes according to DIN 2353 it is necessary to use a support sleeve.*
***You must use them only with fittings according to SAEJ514.*

GUARNIZIONI IMPIEGATE
Sealing Materials :

Le guarnizioni impiegate, possono essere sia in NBR ed hanno una temperatura di esercizio compresa tra i -35˚C ed i 100˚C e durezza 85±5 Shore, sia in VITON® se dovessero sostenere temperature di esercizio più elevate comprese tra i -25˚C ed i 200˚C e durezza 80±5 Shore. Tali prodotti devono essere stoccati secondo la norna DIN 7716 (Requisiti per l'immagazzinamento di prodotti in gomma e caucciù).

Seals used can be in NBR (Nitrile Rubber), so they have an operating temperature from -35˚C to 100˚C and hardness 85± 5 Shore, and in Viton® in case they are used for highest temperature from -25˚C to 200˚C and hardness 80±5 Shore. These products must be stored according to DIN 7716 (This is essential for the stocking of rubber products).

TEMPERATURE AMMESSE E RIDUZIONI DI PRESSIONE
Pressure reductions and Temperature

Acciaio inossidabile da -60˚C a 200˚C secondo ISO 8434.
La riduzione della pressione di esercizio sui raccordi in acciaio inossidabile 1.4571 deve essere applicata in funzione della temperatura di esercizio riscontrata, secondo la NORMA ISO 8434. In caso di sistema con più componenti i parametri devono essere calcolati sul componente più debole.

Stainless steel from -60˚C to 200˚C according to ISO 8434.
The reduction of the operating pressure on stainless steel fittings 14571 must be applied according to the operating temperature, in accordance with ISO 8434. For systems consisting of more components the parameters must be calculated on the weakest component.

Tipo di acciaio impiegato Type of Steel used	Temperatura di esercizio Operating temperature	Riduzione della pressione di esercizio Oper.Press.Reduc.
1,4571	≥ 50˚C	-4%
1,4571	≥100˚C	-11%
1,4571	≥200˚C	-20%

RESPONSABILITÀ
Liability

PRESCRIZIONI DA RISPETTARE
Warning

- *Rispettare tutte le indicazioni di montaggio contenuto in questo catalogo.*
- *Utilizzare per le connessioni, tubi di qualità come da «tabella tubi consigliati»*
- *Sui tubi a pareti sottili applicare boccole di rinforzo.*
- *Utilizzare solo componenti M.C.S. per le connessioni e non alterare il prodotto originale M.C.S. .*
- *Lubrificare sempre tutti i componenti come indicato nelle istruzioni di montaggio.*
- *Rispettare la pressioni e le temperature indicate nel catalogo.*
- *Controllare visivamente il corretto graffaggio dell'anello tagliente sul tubo.*
- *Premontare l'anello tagliente con punzoni temprati o con macchine di premontaggio; non è consentito il montaggio in opera.*
- *Il non utilizzo delle suddette prescrizioni, oltre ad alterare la sicurezza funzionale dei nostri prodotti, esclude tutti i diritti di garanzia.*

- Observe assembly instructions contained in this catalogue;
- Observe Tube Recommendations (See page 5: Recommended stainless steel tubes);
- In case of assembly with thin walled tubes, apply support sleeves;
- For complete safety, use only M.C.S. components; do not alter/modify M.C.S.'s products;
- Components must be lubricated as seen in the Assembly Instructions section;
- Observe pressure and temperatures as indicated;
- Check the correct stapling of the cutting ring on the tube;
- Preassemble the cutting ring using pre-assembly hardened tools or pre-assembly machines; assembly during the operation is not allowed;
- There is no functional safety of our products and no warranty rights without observing the above described instructions.

RESPONSABILITÀ PRODOTTO
Product Liability

I prodotti M.C.S. sono garantiti esenti da difetti di lavorazione e di materiale.
Tale garanzia verrà applicata al prodotto effettivamente difettoso che presenti non conformità o mal funzionamenti non riscontrabili al momento dell'acquisto, purché lo stesso sia utilizzato esattamente come riportato nelle nostre istruzioni di montaggio e comunque entro e non oltre sei mesi dalla data di acquisto del materiale.

M.C.S.'s products are guaranteed without manufacturing or material fault.
This warranty will be applied to the product effectively faulty, which presents a bad functioning not showed at the moment of the purchase and only if it has been used as recommended in our assembly instructions and within six months after the purchase date.

COLLAUDO
Testing

I raccordi M.C.S. sono costruiti rispettando integralmente la norma ISO 8434-1/DIN2353 di riferimento. Le pressioni riportare nel presente catalogo sono quelle massime consentite collaudate con un fattore di sicurezza 4:1 sia per le connessioni tubo-tubo, che per i terminali cilindrici con guarnizione incassata. Il fattore di sicurezza scende a 2.5:1 sui terminali cilindrici con tenuta in metallo su metallo e sui terminali a filettatura conica. Inoltre tutta la gamma di adattatori DIN 2353 prodotta dalla M.C.S. Hydraulics è stata collaudata fino alla pressione di scoppio del tubo rigido. La M.C.S. Hydraulics S.r.l. dispone, per le prove interne, di un banco per prove in pressioni di tubi che consente di eseguire test di tenuta, scoppio ed a pressione pulsante fino a 4000 Bar; su richiesta è possibile effettuare il collaudo dei componenti ordinati ed ottenere il rilascio del certificato delle prove eseguite secondo la ISO 8434-5: è possibile infine richiedere che tali prove vengano eseguite alla presenza di ispettori di Enti Certificatori; tra i quali si citano (a titolo esemplificativo e non esaustivo): Rina, Lloyd's, Register, DNV etc.

M.C.S's Din compression couplings are completely manufactured in accordance with ISO 8434-1/DIN 2353 standards.
Pressure values shown in this catalogue are those maximum allowed and tested considering the security factor 4:1, it is intended for tube to tube connections and parallel stud couplings with captive seal. The security factor is 2.5:1 for metal to metal sealing parallel and taper parallel threaded stud couplings. Besides, all Din 2353 couplings manufactured by M.C.S. Hydraulics have been tested up to tube burst pressure.
A test bench is available to provide in-house static, burst and pulsing pressure tests up to 4000 Bar. On request it is possible to test the components and to issue certificates according to ISO 8434-5.
It is also possible to have these tests performed in the presence of qualified inspectors: Rina, Lloyd's Register, DNV for instance.



COPPIE DI SERRAGGIO - Assembly Torques

Raccordi Din 2353 con Filetto Gas Cilindrico

Stud Ends DIN 2353 with BSP Thread

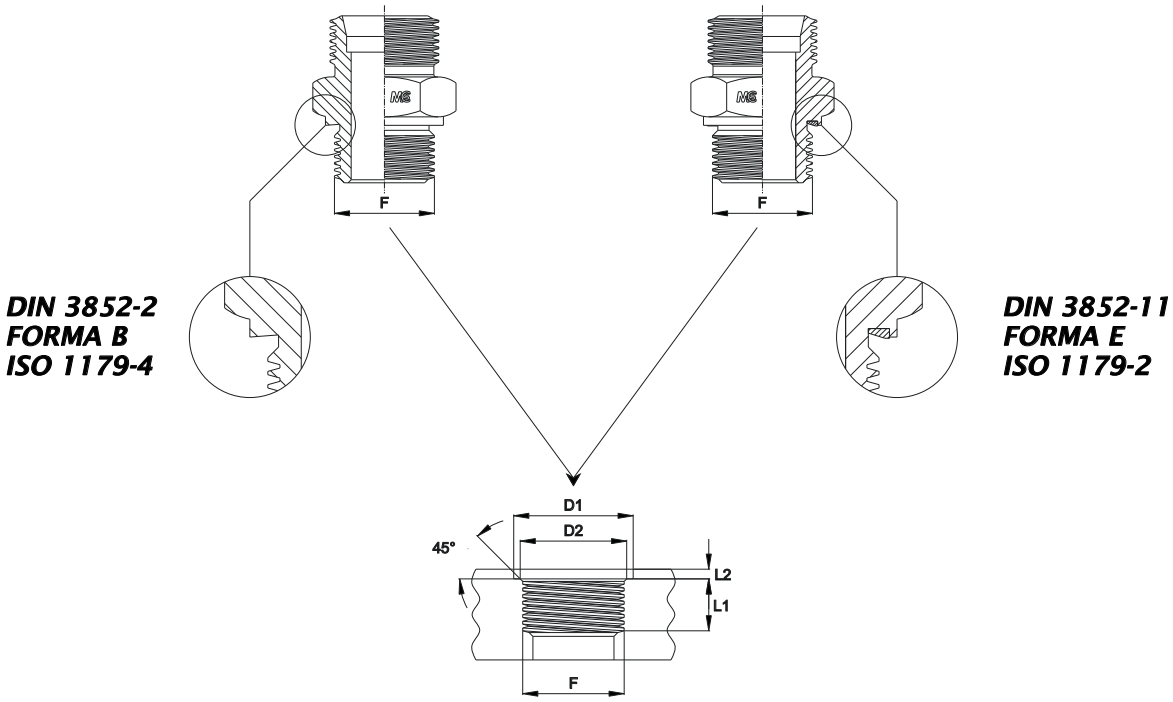

Filetto Gas Cilindrico - BSP Thread								
Serie / Series	Tubo / Tube	F	D1 Min	D2	L1 Min	L2 Max	Coppia (NM) Tipo 1 / Torque (NM) Type 1	Coppia (NM) Tipo 2 / Torque (NM) Type 2
L	6	1/8"	15	9,8	8	1,0	20	20
	8	1/4"	20	13,2	12	1,5	45	45
	10	1/4"	20	13,2	12	1,5	45	45
	12	3/8"	23	16,7	12	2,0	70	70
	15	1/2"	28	21,0	14	2,5	130	85
	18	1/2"	28	21,0	14	2,5	130	85
	22	3/4"	33	26,5	16	2,5	170	170
	28	1"	41	33,3	18	2,5	330	330
	35	1"1/4	51	42,0	20	2,5	510	430
	42	1"1/2	56	47,9	22	2,5	600	510
S	6	1/4"	20	13,2	12	1,5	55	55
	8	1/4"	20	13,2	12	1,5	55	55
	10	3/8"	23	16,7	12	2,0	85	80
	12	3/8"	23	16,7	12	2,0	85	80
	14	1/2"	28	21,0	14	2,5	150	110
	16	1/2"	28	21,0	14	2,5	150	110
	20	3/4"	33	26,5	16	2,5	280	170
	25	1"	41	33,3	18	2,5	330	330
	30	1"1/4	51	42,0	20	2,5	510	430
	38	1"1/2	56	47,9	22	2,5	680	510

COPPIE DI SERRAGGIO - Assembly Torques

Raccordi Din 2353 con Filetto Metrico Cilindrico

Stud Ends DIN 2353 with METRIC Thread

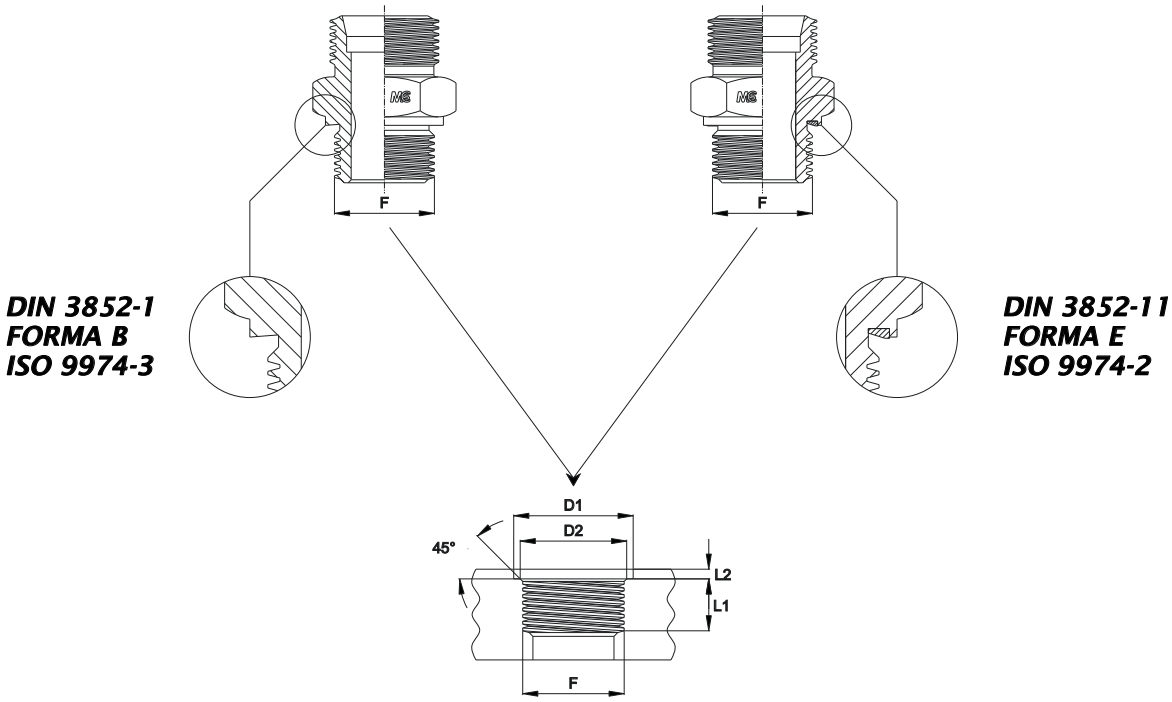

Filetto Metrico Cilindr. - Metric Thread								
Serie / Series	Tubo / Tube	F	D1 Min	D2	L1 Min	L2 Max	Coppia (NM) Tipo 1 / Torque (NM) Type 1	Coppia (NM) Tipo 2 / Torque (NM) Type 2
L	6	10x1,0	15	10,0	8	1,0	20	20
	8	12x1,5	18	12,0	12	1,5	30	30
	10	14x1,5	20	14,0	12	1,5	45	45
	12	16x1,5	23	16,0	12	1,5	60	55
	15	18x1,5	25	18,0	12	2,0	80	70
	18	22x1,5	28	22,0	14	2,5	130	120
	22	26x1,5	33	26,0	16	2,5	180	170
	22	27x2,0	33	27,0	16	2,5	-	-
	28	33x2,0	41	33,0	18	2,5	330	330
	35	42x2,0	51	42,0	20	2,5	470	430
	42	48x2,0	56	48,0	22	2,5	600	510
S	6	12x1,5	18	12,0	12	1,5	40	40
	8	14x1,5	20	14,0	12	1,5	55	55
	10	16x1,5	23	16,0	12	1,5	80	70
	12	18x1,5	25	18,0	12	2,0	105	85
	14	20x1,5	27	20,0	14	2,0	150	120
	16	22x1,5	28	22,0	14	2,5	170	130
	20	27x2,0	33	27,0	16	2,5	200	170
	25	33x2,0	41	33,0	18	2,5	390	330
	30	42x2,0	51	42,0	20	2,5	510	430
	38	48x2,0	56	48,0	22	2,5	680	510

Raccordi Din 2353 con Filetto Gas Conico
Stud Ends DIN 2353 with BSPT Thread

DIN 3852-2
FORMA C

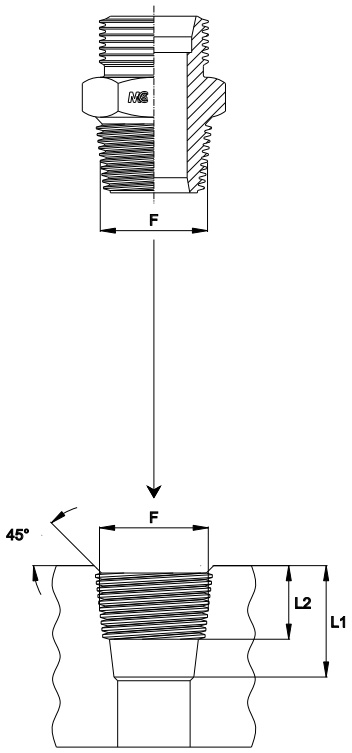

Filetto Gas Conico-BSPT Thread				
Serie / *Series*	*Tubo* / *Tube*	*F*	*L1*	*L2*
L	*6*	*1/8”*	*9,5*	*5,5*
	8	*1/4”*	*13,5*	*8,5*
	10	*1/4”*	*13,5*	*8,5*
	12	*3/8”*	*13,5*	*8,5*
	15	*1/2”*	*16,5*	*10,5*
	18	*1/2”*	*16,5*	*10,5*
	22	*3/4”*	*19*	*13,0*
	28	*1”*	-	-
	35	*1”1/4*	-	-
	42	*1”1/2*	-	-
S	*6*	*1/4”*	*13,5*	*8,5*
	8	*1/4”*	*13,5*	*8,5*
	10	*3/8”*	*13,5*	*8,5*
	12	*3/8”*	*13,5*	*8,5*
	14	*1/2”*	*16,5*	*10,5*
	16	*1/2”*	*16,5*	*10,5*
	20	*3/4”*	*19*	*13,0*
	25	*1”*	-	-
	30	*1”1/4*	-	-
	38	*1”1/2*	-	-

Raccordi Din 2353 con Filetto NPT
Stud Ends DIN 2353 with NPT Thread

DIN 3852-2
FORMA C

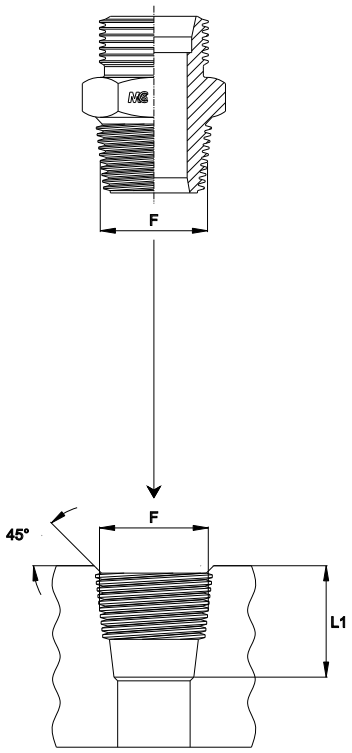

Filetto NPT - NPT Thread			
Serie Series	*Tubo Tube*	*F*	*L1*
L	*6*	*1/8"-27*	*11,6*
	8	*1/4"-18*	*16,4*
	10	*1/4"-18*	*16,4*
	12	*3/8"-18*	*17,4*
	15	*1/2"-14*	*22,6*
	18	*1/2"-14*	*22,6*
	22	*3/4"-14*	*23,1*
	28	*1"-11,5*	*27,8*
	35	*1"1/4-11,5*	*28,3*
	42	*1"-1/211,5*	*28,3*
S	*6*	*1/4"-18*	*16,4*
	8	*1/4"-18*	*16,4*
	10	*3/8"-18*	*17,4*
	12	*3/8"-18*	*17,4*
	14	*1/2"-14*	*22,6*
	16	*1/2"-14*	*22,6*
	20	*3/4"-14*	*23,1*
	25	*1"-11,5*	*27,8*
	30	*1"1/4-11,5*	*28,3*
	38	*1"-1/211,5*	*28,3*

Raccordi Din 2353 con Filetto Metrico Conico
Stud Ends DIN 2353 with Metric Taper Thread

DIN 3852-1
FORMA C

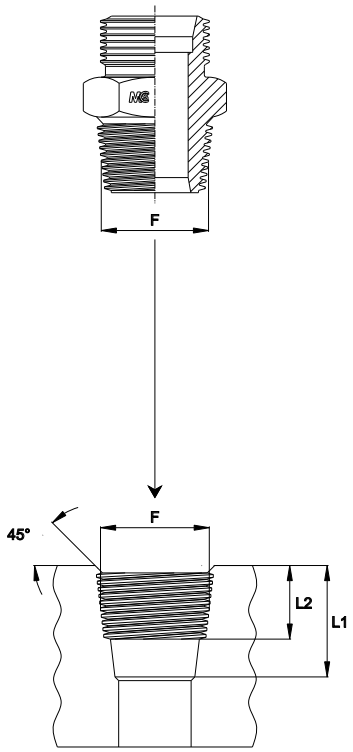

Filetto Metrico Conico - Metric Taper Thread				
Serie Series	*Tubo Tube*	*F*	*L1*	*L2*
L	*6*	*10x1,0*	*10,0*	*5,5*
	8	*12x1,5*	*13,5*	*8,5*
	10	*14x1,5*	*13,5*	*8,5*
	12	*16x1,5*	*13,5*	*8,5*
	15	*18x1,5*	*13,5*	*8,5*
	18	*22x1,5*	*15,5*	*10,5*
S	*6*	*12x1,5*	*13,5*	*8,5*
	8	*14x1,5*	*13,5*	*8,5*
	10	*16x1,5*	*13,5*	*8,5*
	12	*18x1,5*	*13,5*	*8,5*
	14	*20x1,5*	*15,5*	*10,5*
	16	*22x1,5*	*15,5*	*10,5*

COPPIE DI SERRAGGIO - Assembly Torques
Raccordi Din 2353 con Filetto UNF/UN-2A
Stud Ends DIN 2353 with UNF/UN-2A Thread

ISO 11926-2/3

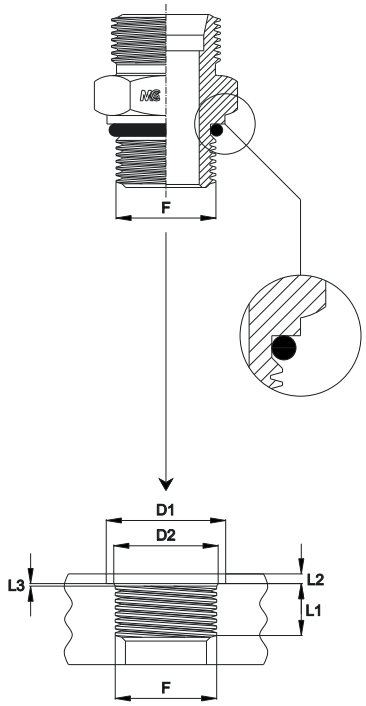

Filetto UNF/UN-2A - UNF/UN-2A Thread									
Serie / Series	Tubo / Tube	F	D1 Min	D2	L1 Min	L2 Max	L3	Z°	Coppia (NM) / Torque (NM)
L	6	7/16-20	21,0	12,45	11,5	1,6	2,4	12	20
	8	1/2-20	23,0	14,05	11,5	1,6	2,4	12	25
	10	1/2-20	23,0	14,05	11,5	1,6	2,4	12	25
	12	9/16-18	25,0	15,70	12,7	1,6	2,5	12	30
	15	3/4-16	30,0	20,65	14,3	2,4	2,5	15	45
	18	3/4-16	30,0	20,65	14,3	2,4	2,5	15	45
	18	7/8-14	34,0	24,00	16,7	2,4	2,5	15	55
	22	1"1/16-12	41,0	29,20	19,0	2,4	3,3	15	85
	28	1"5/16-12	49,0	35,55	19,0	3,2	3,3	15	130
	35	1"5/8-12	58,0	43,55	19,0	3,2	3,3	15	170
	42	1"7/8-12	65,0	49,90	19,0	3,2	3,3	15	180
S	6	1/2-20	23,0	14,05	11,5	1,6	2,4	12	25
	8	1/2-20	23,0	14,05	11,5	1,6	2,4	12	25
	10	9/16-18	25,0	15,70	12,7	1,6	2,5	12	35
	12	9/16-18	25,0	15,70	12,7	1,6	2,5	12	35
	14	3/4-16	30,0	20,65	14,3	2,4	2,5	15	60
	16	3/4-16	30,0	20,65	14,3	2,4	2,5	15	60
	16	7/8-14	34,0	24,00	16,7	2,4	2,5	15	85
	20	1"1/16-12	41,0	29,20	19,0	2,4	3,3	15	150
	25	1"5/16-12	49,0	35,55	19,0	3,2	3,3	15	230
	30	1"5/8-12	58,0	43,55	19,0	3,2	3,3	15	250
	38	1"7/8-12	65,0	49,90	19,0	3,2	3,3	15	320

COPPIE DI SERRAGGIO - Assembly Torques

Anello tagliente - Cono DIN 3861 per acciaio inox

Cutting Ring - DIN 3861 cone for Stainless Steel

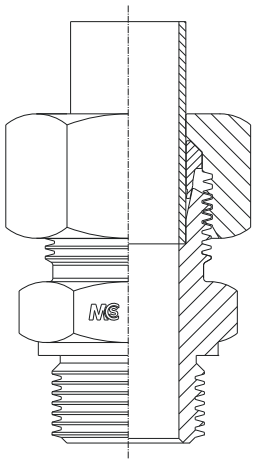

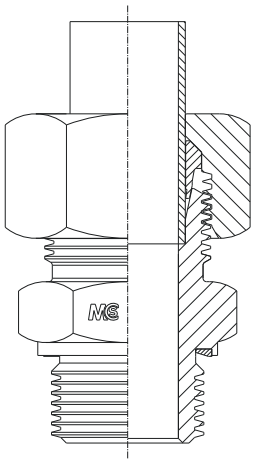

Serie	Tubo	Filetto Metrico	Manuale Inox (Nm)	Macchina Inox (Bar)
Series	Tube	Metric Thread	Manual Stainless (Nm)	Machine Stainless (Bar)
L	6	12x1,5	30	20
	8	14x1,5	55	30
	10	16x1,5	85	35
	12	18x1,5	120	35
	15	22x1,5	130	40
	18	26x1,5	220	60
	22	30x2,0	320	70
	28	36x2,0	500	80
	35	45x2,0	970	100
	42	52x2,0	1110	160
S	6	14x1,5	45	20
	8	16x1,5	55	30
	10	18x1,5	90	35
	12	20x1,5	105	35
	14	22x1,5	150	40
	16	24x1,5	180	55
	20	30x2,0	340	80
	25	36x2,0	530	105
	30	42x2,0	610	130
	38	52x2,0	850	160

MISURE DEL CONO A NORMA DIN 3861 E DIAMETRO DEI FILETTI A NORMA DIN 3853

Definition Of Cone Size to DIN 3861 Standards Thread Diameters to DIN 3853 Standards

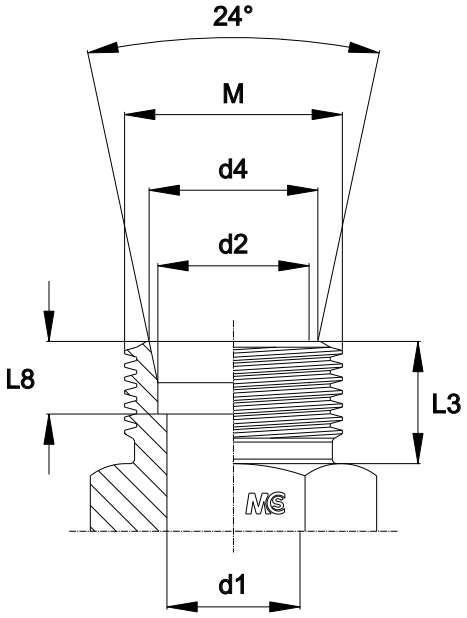

Serie / Series	Bar	Ø Tubo / Ø Tube	Filetto Metrico / Metric Thread	d1	d2	$d4^{+0,1}$	L3	$L8^{+0,3}$
LL	100	4	8x1,0	3,0	4,0	5,0	8,0	4,0
		6	10x1,0	4,5	6,0	7,5	8,0	5,5
		8	12x1,5	6,0	8,0	9,5	9,0	5,5
L	250	6	12x1,5	4,0	6,0	8,1	10,0	7,0
		8	14x1,5	6,0	8,0	10,1	10,0	7,0
		10	16x1,5	8,0	10,0	12,3	11,0	7,0
		12	18x1,5	10,0	12,0	14,3	11,0	7,0
		15	22x1,5	12,0	15,0	17,3	12,0	7,0
	160	18	26x1,5	15,0	18,0	20,3	12,0	7,5
		22	30x2,0	19,0	22,0	24,3	14,0	7,5
	100	28	36x2,0	24,0	28,0	30,3	14,0	7,5
		35	45x2,0	30,0	35,0	38,0	16,0	10,5
		42	52x2,0	36,0	42,0	45,0	16,0	11,0
S	630	6	14x1,5	4,0	6,0	8,1	12,0	7,0
		8	16x1,5	5,0	8,0	10,1	12,0	7,0
		10	18x1,5	7,0	10,0	12,3	12,0	7,5
		12	20x1,5	8,0	12,0	14,3	12,0	7,5
		14	22x1,5	10,0	14,0	16,3	14,0	8,0
	400	16	24x1,5	12,0	16,0	18,3	14,0	8,5
		20	30x2,0	16,0	20,0	22,9	16,0	10,5
		25	36x2,0	20,0	25,0	27,9	18,0	12,0
	250	30	42x2,0	25,0	30,0	33,0	20,0	13,5
		38	52x2,0	32,0	38,0	41,0	22,0	16,0

- ISTRUZIONI DI MONTAGGIO -
- ASSEMBLY INSTRUCTIONS -

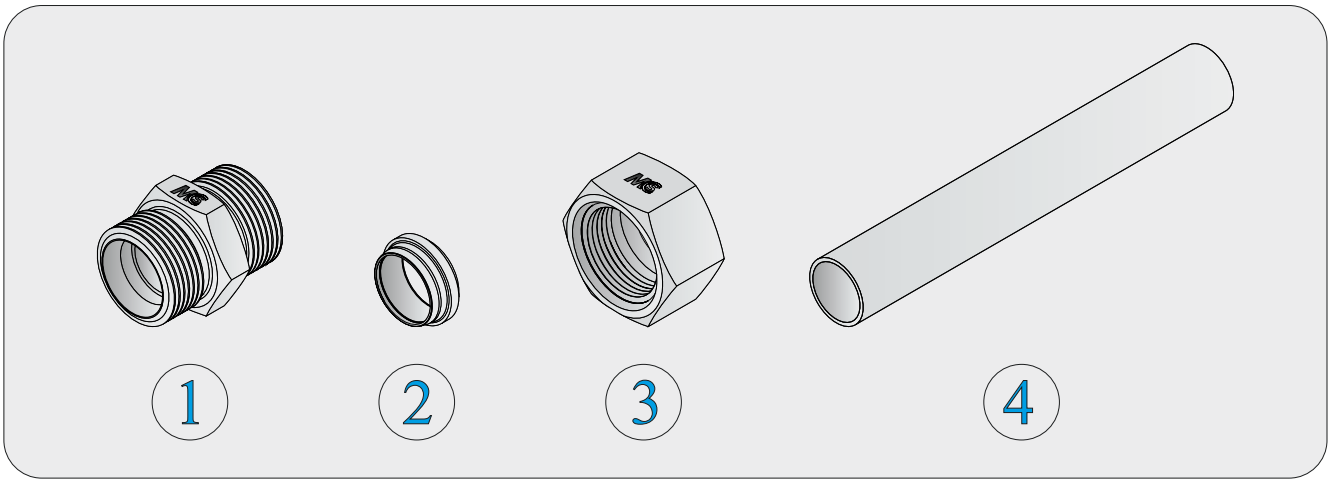

I raccordi a norma UNI EN ISO 8434-1 prodotti dalla M.C.S. Hydraulics sono costituiti dai seguenti componenti:

1)Corpo raccordo;
2)Anello tagliente;
3)Dado;
4)Tubo rigido.

Tali componenti assemblati a regola d'arte vanno a generare un unico corpo a tenuta stagna, la cui tenuta, è determinata dal serraggio tra il dado e il corpo raccordo che avanzando, fanno si che, l'anello tagliente scivoli tra la superficie conica del dado e quella cilindrica del tubo, sin dentro all'imbocco conico a 24° del corpo raccordo, andando cosi, ad intagliare il tubo omogeneamente su tutta la superficie creando un graffaggio tale da garantire l'ermeticità e l'antisfilamento dell'anello dal tubo.

UNI EN ISO 8434-1 Compression fittings manufactured by M.C.S. Hydraulics, consist of:

1)Body
2)Cutting Ring
3)Compression Nut
4)Rigid Tube

These components, when assembled in line with proper practice and according to manufacturer's specifications, provide a sealed joint.
As the nut is tightened, the cutting ring is pushed into the 24°cone of the coupling.
As a result of this compression the cone inside the ring expands and the pipe is smoothly blocked by teeth guaranteeing a hermetic seal.

1 - Avvertenze
1 - Warning

Le seguenti istruzioni di montaggio espongono le tre distinte possibilità di montaggio :

A)Montaggio diretto sul corpo del raccordo;
B)Montaggio con punzone di pre-montaggio temprato;
C)Montaggio con macchina di pre-montaggio.

Per montaggi in successione sconsigliamo il montaggio diretto sul corpo del raccordo.
Si consiglia, quindi, l'uso di attrezzature di pre-montaggio.
E' molto importante che vengano seguite rigorosamente le istruzioni di montaggio descritte di seguito poiché un uso improprio comporterebbe rischi sia per la sicurezza che per la tenuta di lieve o grave entità.

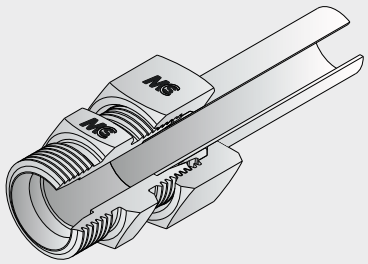

The following Assembly instructions describe three
Different procedures for Assembly:
A)Manual assembly Direct in fitting;
B)Assembly using pre-assembly hardened tool;
C) Assembly using pre-assembly machine.

For repeated assembly, the use of pre-assembly work-shop machines is recommended instead of manual direct in fitting assembly. You are strongly advised to follow these strict assembly Instructions. An incorrect assembly may cause leaks as well as safety risks.

Si consiglia l'uso di tubi in acciaio inossidabile calibrati e lucidati, trafilati a freddo senza saldatura, in aisi 316 Ti secondo la norma DIN 17458 o ASTM A269, con durezza massima sul diametro esterno di 85HRB (vedi tabella acciaio da impiegare).

The use of seamless stainless steel Aisi 316Ti (EN 1.4571) cold drawn, brightened tubes, according to DIN 17458 or ASTM A269, with maximum hardness on outer diameter of 85HRB (see table) is recommended.

2 - Preparazione del tubo
2 - Tube preparation

2.1

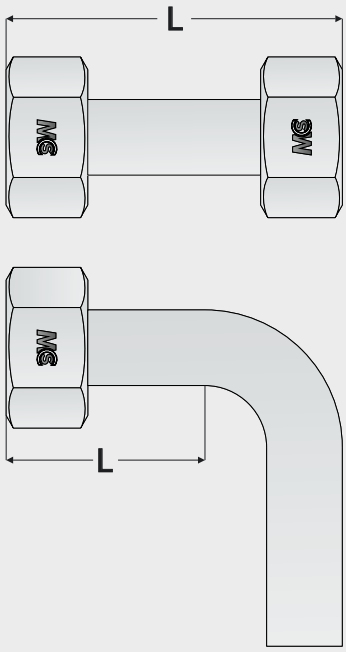

Prima di cominciare l'installazione bisogna necessariamente determinare le eventuali lunghezze minime del tubo rigido le quali sono:
- Un tubo tra due raccordi necessita uno spazio minimo di 2.5/3 volte l'altezza del dado da utilizzare;
- Mentre un tubo con una qualsiasi angolazione necessita di uno spazio minimo di 2 volte l'altezza del dado da utilizzare.
In caso di pre-montaggio meccanico è indispensabile consultare le lunghezze minime riportate nel manuale d'uso della macchina.

Before starting the assembly procedure, it is necessary To determine the minimum tube lengths, according to the following rules: - Minimum length for straight tube ends = 2.5/3 times nut length;
- In case bending is required, the minimum length = 2 times nut length In case of pre-assembly by machine, It is essential that you follow the recommendations for minimum lengths Stated in the machine operating manual.

Tagliare il tubo con una angolazione di 90°, tale taglio risulterà più semplice con l'ausilio di un seghetto a mano e l'apposito attrezzo o di una sega automatica.
Tali attrezzature ci permetteranno di tagliare il tubo perfettamente a squadro, è inoltre, sconsigliato l'uso di TRONCATRICI e/o TAGLIATUBI poiché il loro utilizzo va a deformare la geometria cilindrica del tubo rendendolo ovale, provocando di conseguenza la totale riduzione di durata e tenuta del raccordo.

2.2

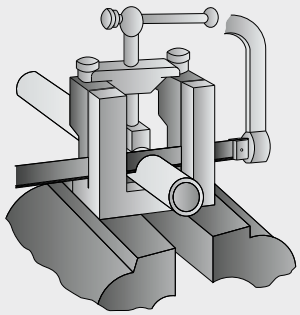

Cut the tube squarely using a manual hacksaw together with an appropriate tube-cutting tool or an automatic saw. The use of pipe-cutters or shearing machines is not recommended as they could alterthe cylindrical geometry of the tubes causing leakage and reducing the life cycle time of a connection.

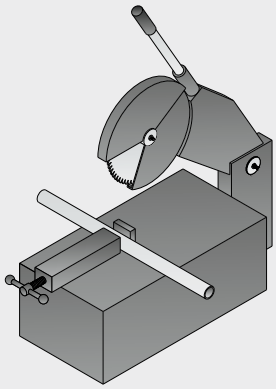

Sbavare l'estremità interna ed esterna del tubo e ripulire il foro del tubo da eventuali trucioli.

Remove internal and external burrs and clean the tube thoroughly.

2.3

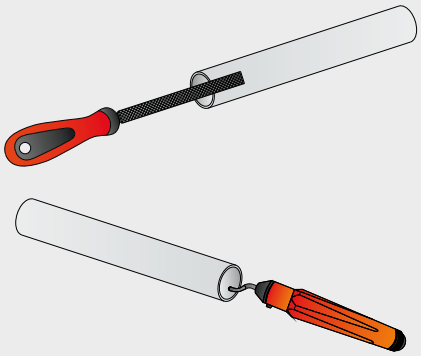

2.4

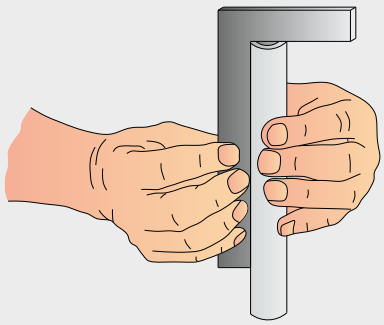

Verificare tramite squadra di riscontro a 90° se il taglio effettuato è ad angolo retto. E' ammessa una tolleranza massima di ± 0.5°.

Check the correctness of the right angle cut (90°). Maximum tolerance is ± 0.5° deviation.

I tubi tagliati o sbavati in modo errato riducono la durata e la tenuta del raccordo

Chips, dirt, internal or external burrs and incorrectly cut tubes prevent correct assembly and can cause leakages and/or a reduction of the life cycle time.

2.5

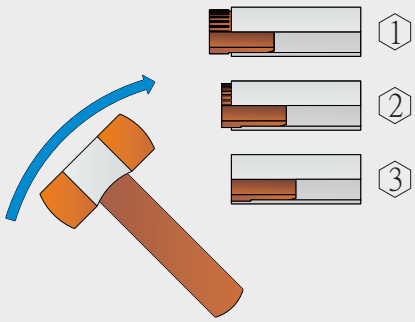

In caso di installazione con tubi dalle pareti sottili è necessario inserire nel foro una boccola di rinforzo procedendo come di seguito descritto:
- Inserire la boccola di rinforzo sino alla dentellatura;
- Martellare lievemente con martello di gomma sino ad avere una sede perfettamente piana.

In case of assembly with thin walled tubes it is necessary to apply support sleeves:
- Insert support sleeve into tube up to the toothing rim;
- Drive sleeve into tube-end using a rubber hammer.

3 - Preparazione al montaggio
3 - Material preparaton

Prima di assemblare bisogna necessariamente ingrassare i componenti (filettatura corpo raccordo, superficie esterna anello tagliente, filettatura dado, estremità del tubo) con il composto antigrippaggio sintetico, contattare il nostro ufficio tecnico per conoscere i prodotti consigliati

Before assembling, the components need to be lubricated with a Synthetic Anti-seize compound. For further information or advice on products to be used, kindly contact our Technical Department.

3.1

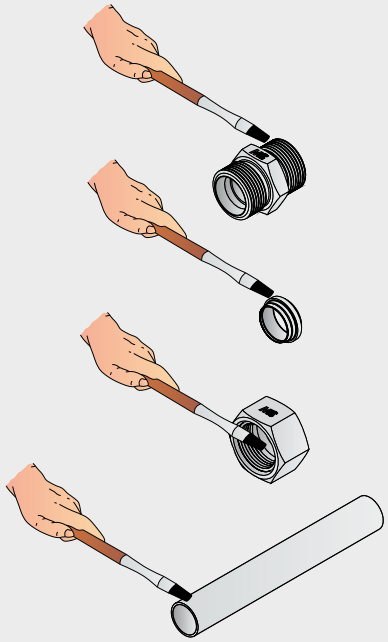

Controllare visivamente il corretto orientamento dell' anello tagliente.

Visually check that the cutting ring has been placedproperly.

3.2

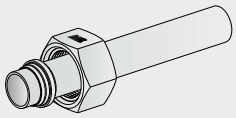

4 - Montaggio raccordo
4 - Assembly process

4.1

I raccordi posso essere assemblati in 3 semplici modi:

Three different methods are suitable to assemble DIN Compression fittings:

Modo A	Modo B	Modo C
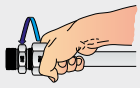  Montaggio diretto sul corpo del raccordo. Manual assembly Direct in fitting;	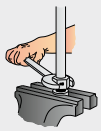 Montaggio mezzo punzone di pre-montaggio Assembly using pre-assembly hardened tool;	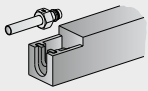 Montaggio mezzo macchina di pre-montaggio Assembly using pre-assembly machine

Si consiglia di utilizzare punzoni di pre-montaggio temprati per i diametri fino al S16, mentre, per diametri maggiori utilizzare macchine di pre-montaggio.



Si sconsiglia il montaggio diretto sul corpo del raccordo.

Hardened, pre-assembly tools recommended for diameters up to S16; for bigger dimensions it is advisable to use pre-assembly machines.

It is always preferable to avoid Manual Assembly.

Modo A
Montaggio diretto sul corpo del raccordo
Manual assembly direct in fitting

A.1

Ingrassare i componenti come nel punto 3.1. Inserire l'estremità del tubo spingendolo contro la battuta nel corpo del raccordo. Durante la procedura di pre-montaggio è necessario che il tubo venga mantenuto in battuta per evitare montaggi errati. Stringere sino in fondo manualmente senza l'ausilio di chiavi. Serrare con chiave il dado per circa 1 giro, cosi facendo l'anello tagliente aderirà al corpo raccordo ed inciderà il tubo.

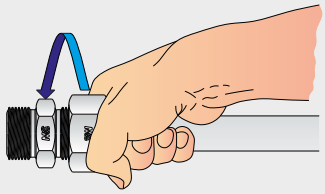

Components must be lubricated (see section 3.1) Press tube end into fitting body. During this procedure, the tube must Be held in a rabbet to prevent incorrect assembly. Screw on the nut until finger tight. Tighten nut for about 1 turn using a spanner. The cutting ring is pushed into the cone of the coupling and engraves the tube.

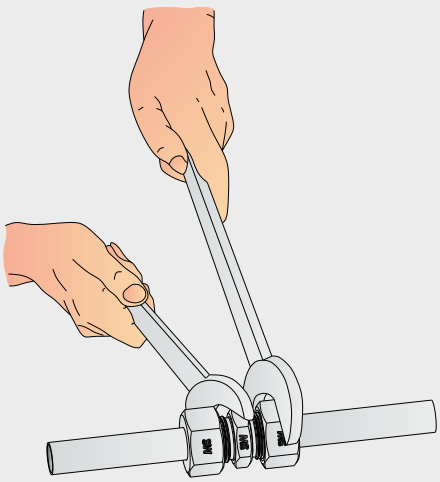

Attenzione, utilizzare il corpo del raccordo una sola volta per il primo montaggio.
In caso di impieghi ripetuti può essere pregiudicato il funzionamento dello stesso.

Warning, coupling body may be used only once.

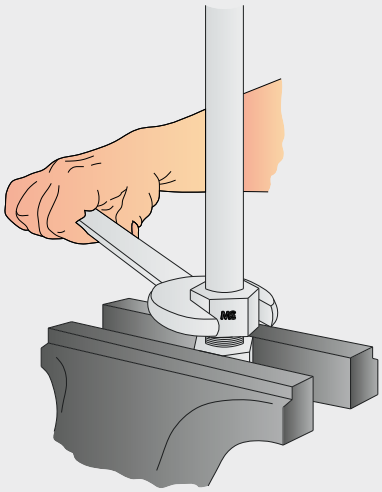

Modo B

Montaggio mezzo punzone di pre-montaggio

Assembly using pre-assembly hardened tool

B.1

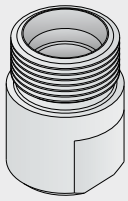

Pulire la faccia conica del punzone di pre-montaggio per il controllo visivo.

Clean cone surface of pre-assembly body for visual check.

B.2

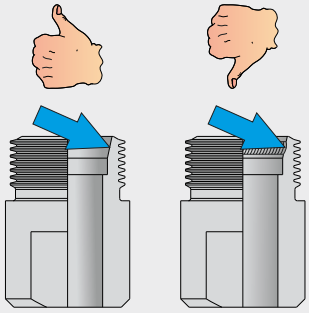

Controllare visivamente l'integrità della faccia conica essa non dovrà presentare alcun tipo di danneggiamento (crepe, incisioni, usura, ...) altrimenti dovrà essere sostituita.

Visually check sealing surface for wear, damages or cracks.

B.3

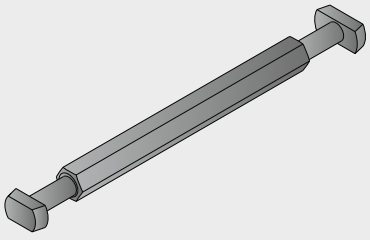

Per controllare la perfetta conicità del punzone va utilizzato uno speciale calibro di precisione.

The use of a special cone gauge is recommended to check the perfect taper of the tool.

B.4

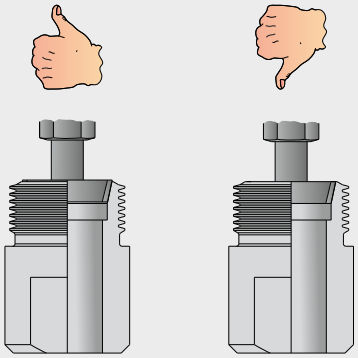

Controllare con il calibro di precisione eventuali deformazioni del cono.

Check for possible alterations in shape.

B.5

Controllare la profondità di inserimento del tubo poiché eventuali differenze di profondità potrebbero creare discostamenti tra le parti e quindi provocare delle perdite.

Check insertion depth of the tube: differences in insertion depths can result in leakages;

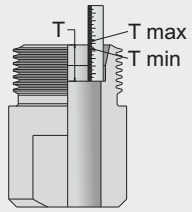

Serie Series	Tipo Type	T min	T max
L	6	6,95	7,05
	8	6,95	7,05
	10	6,95	7,05
	12	6,95	7,05
	15	6,95	7,05
	18	7,45	7,55
	22	7,45	7,55
	28	7,45	7,55
	35	10,45	10,55
	42	10,95	11,05

Serie Series	Tipo Type	T min	T max
S	6	6,95	7,05
	8	6,95	7,05
	10	7,45	7,55
	12	7,45	7,55
	14	7,95	8,05
	16	8,45	8,55
	20	10,45	10,55
	25	11,95	12,05
	30	13,45	13,55
	38	15,95	16,05

B.6

Prima di assemblare bisogna necessariamente ingrassare i componenti (filettatura corpo raccordo, superficie esterna anello tagliente, filettatura dado, estremità del tubo) con il composto antigrippaggio sintetico, contattare il nostro ufficio tecnico per conoscere i prodotti consigliati

Before assembling,components need to be lubricated with a synthetic anti-seize compound. For further information, kindly contact our Technical Department.

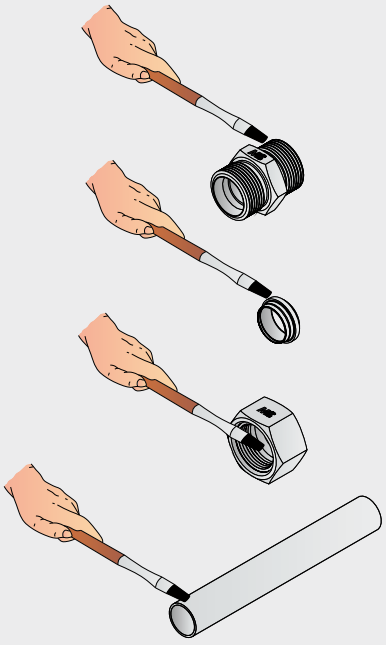

B.7

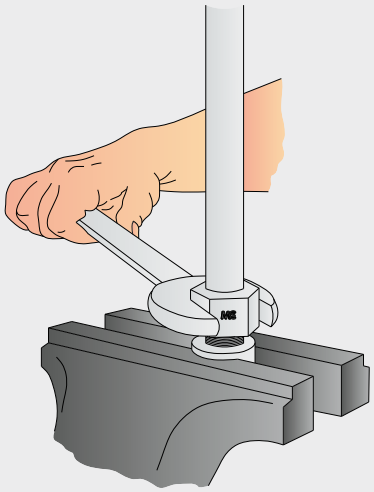

Stringere il punzone di pre-montaggio nella morsa, inserire e spingere il tubo verso il punzone, tenere costantemente premuto fino ad avvenuto montaggio eseguire minuziosamente tale procedura altrimenti si incorrerà in un errato montaggio. Avvitare manualmente il dado fino ad un sensibile aumento di forza. A questo punto stringere il dado per circa 1 giro , tale procedura se eseguita correttamente farà in modo che l'anello tagliente incida uniformemente la superficie del tubo. Controllare visivamente a montaggio avvenuto.

Press tube end into the assembly cone and hold it firmly until the assembly procedure has been completed. Screw the nut by hand until a perceptible rise in force, then tighten it again, using a spanner, for about 1 turn. This procedure, when performed correctly, provides a sealed joint as the cutting ring, pushes into the cone of the coupling and smoothly blocks the pipe. Visually check that the assembly has been performed correctly.

Modo C

Montaggio mezzo macchina di pre-montaggio

Assembly using pre-assembly machine

C.1

Posizionare il cono di montaggio e la piastra per la collimazione del centro della misura giusta.

Insert proper tools and plates

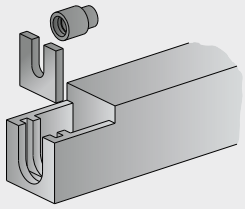

Ingrassare i componenti come al punto 3.1. Inserire prima il dado poi l'anello tagliente facendo attenzione a non invertire il senso dei componenti.

Clean and lubricate components (see section 3.1) insert the nut and then the cutting ring,

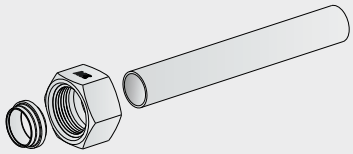

Introdurre il tubo corredato di dado e anello tagliente nell'apposita macchina di pre-montaggio e spingere con forza il tubo verso il cono di montaggio.

Place the tube with the nut and the cutting ring into the pre-assembly machine and press the tube end firmly into the assembly cone.

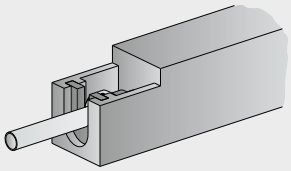

Avviare la procedura di pre-assemblaggio.

Press the START button.



Tabella della pressione indicativa da imprimere sull'anello tagliente rilevata sui nostri macchinari.

Adjustments made according to pressure chart available on the machine.

Pressione indicativa per anelli taglienti			
Serie L		Serie S	
Ø	Bar	Ø	Bar
6	20	6	20
8	30	8	30
10	35	10	35
12	35	12	35
15	40	14	40
18	60	16	55
22	70	20	80
28	80	25	105
35	100	30	130
42	160	38	160

Indicative pressure for cutting rings			
L Series		S Series	
Ø	Bar	Ø	Bar
6	20	6	20
8	30	8	30
10	35	10	35
12	35	12	35
15	40	14	40
18	60	16	55
22	70	20	80
28	80	25	105
35	100	30	130
42	160	38	160

C.2

A procedura ultimata rimuovere il tubo per il controllo visivo.

Once the procedure is completed remove the tube for a visual check.

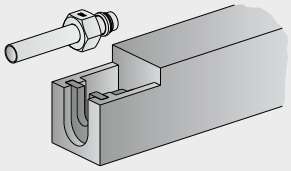

Controllare visivamente se il tubo pre-assemblato presenta un risvolto di materiale pari a circa il 70% del bordo dell'anello tagliente. L'anello tagliente potrebbe ruotare sul tubo.

Visually check to make sure that a visible collar covers the front of the cutting edge (approximately 70%). It doesn't matter if the ring rotates on the tube end.

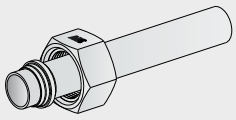

5 - Controllo
5 - Assembly check

Allentare il dado e verificare se l'anello tagliente ha inciso in modo uniforme la superficie del tubo, il risvolto di materiale deve essere nell'ordine del 70%, se ciò non avviene serrare nuovamente il dado con più forza.
L'anello tagliente potrebbe ruotare sul tubo.

Loosen the nut and check to make sure that a visible collar covers the front of the cutting edge (approximately 70%). If it doesn't the nut must be tightened further. It doesn't matter if the ring rotates on the tube end.

5.1

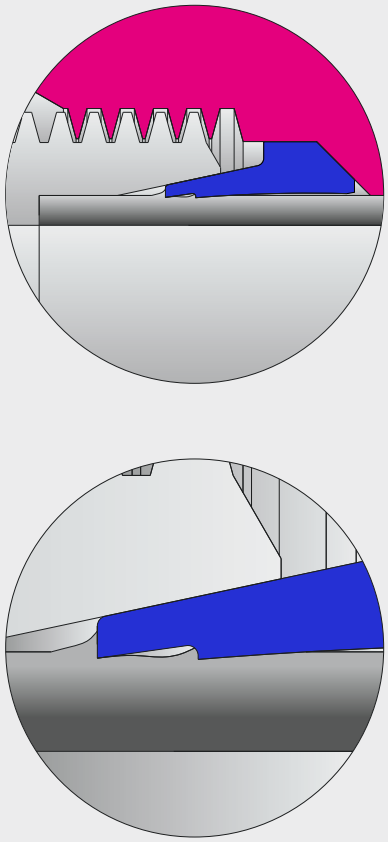

Il controllo visivo è essenziale per un corretto montaggio ed è consigliabile effettuarlo ad ogni passaggio.

Visual check is essential for a correct assembly and must be performed at every step.

5.2

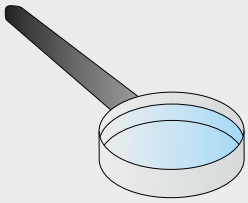

6 - Montaggio finale
6 - Final installation

6.1

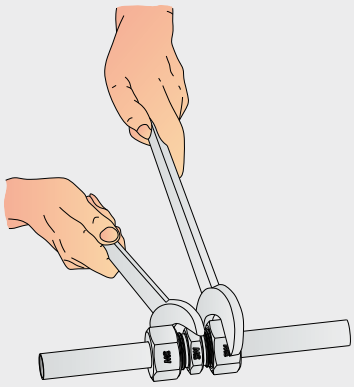

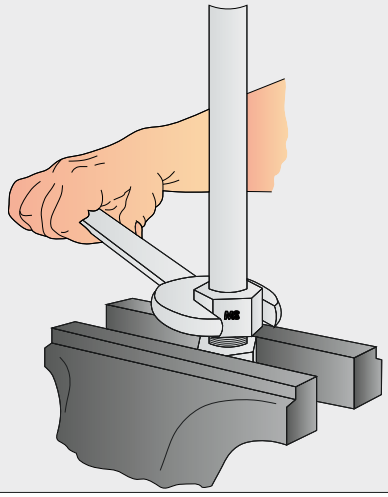

L'estremità del tubo assemblata con il punzone di pre-montaggio temprato o con macchina di pre-montaggio, deve necessariamente essere inserita in un nuovo corpo raccordo, ed il dado serrato manualmente. Serrare il dado con una chiave senza prolunga, fino ad un sensibile aumento di forza, a questo punto stringere il dado per (vedi coppie di serraggio 8.1)

Place tube-end, pre-assembled using pre-assembly hardened tool or pre-assembly machine, onto a new coupling body, and then manually screw the nut. until a perceptible rise in force, then tighten it again, using a spanner, for (see assembly torques 8.1).

7 - Montaggi ripetuti
7 - Repeated assemblies

7.1

I montaggi del tubo possono essere ripetuti più volte.
Al nuovo montaggio finale è necessario stringere il dado fino alla percezione di un aumento sensibile della forza.
Quindi stringere per (vedi coppie di serraggio 8.1).

Repeated assemblies are allowed. In case of a re-assembly the nut must be tightened until a perceptible rise in force.
Then tighten it again, using a spanner, for (see assembly torques 8.1).

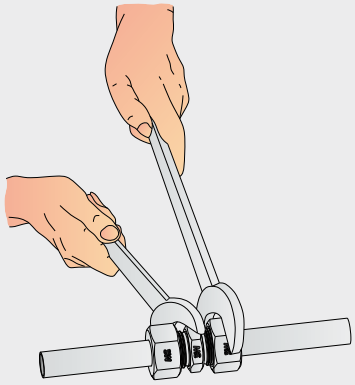

Attenzione!
Il risultato del montaggio, come il risvolto di materiale ecc. deve essere controllato (vedere sez.5 Controllo).

Warning!
When assembly is completed a control check must be performed (see section 5 Assembly check).

8 - Coppie di serraggio
8 -Assembly Torques

8.1

Le coppie di serraggio sono valori indicativi rilevate in base ai seguenti presupposti :
-Tubi senza saldatura trafilati a freddo secondo la norma DIN 17458, in materiale 1.4571 (Aisi 316Ti);
-Uso del Composto Antigrippaggio Sintetico Chesterton 785.

Tightening torque values are for guidance only, Note:
-Threads must be lubricated with synthetic anti seizing compound (Chesterton 785 e.g.) before screwing in;
-The use of seamless stainless steel Aisi 316Ti (EN 1.4571) cold drawn, brightened tubes, according to DIN 17458 is highly recommended.

Serie Series	Tubo Ø Tube OD	Coppia di serraggio Tightening torque Nm +-5%	Gradi Torque Angle
L	6x1,0	35	90°
L	8x1,5	45	90°
L	10x1,0	65	90°
L	10x1,5	65	90°
L	12x1,5	85	90°
L	12x2,0	90	90°
L	15x1,5	130	90°
L	15x2,0	130	90°
L	18x2,0	220	90°
L	18x2,5	230	90°
L	22x2,0	260	90°
L	22x2,5	290	90°
L	28x2,5	320	90°
L	28x3,0	320	90°
L	35x2,5	500	90°
L	35x3,0	520	90°
L	42x3,0	650	90°
L	42x4,0	670	90°

Serie Series	Tubo Ø Tube OD	Coppia di serraggio Tightening torque Nm +-5%	Gradi Torque Angle
S	6x1,5	48	90°
S	6x2,0	55	90°
S	8x1,5	60	90°
S	8x2,0	65	90°
S	10x2,0	80	90°
S	10x2,5	90	90°
S	12x2,5	100	90°
S	14x2,0	155	90°
S	14x2,5	155	90°
S	16x2,0	175	90°
S	16x3,0	175	90°
S	20x2,5	350	90°
S	20x3,0	350	90°
S	25x3,0	400	90°
S	30x3,0	550	90°
S	30x4,0	650	90°
S	38x4,0	950	90°
S	38x5,0	975	90°

ANELLO TAGLIENTE
CUTTING RING

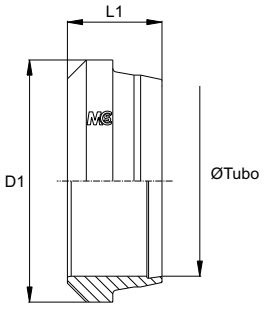

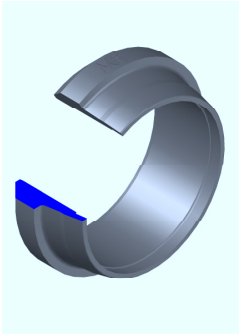

Serie Series	Bar W.P.	Codice Part Number	Ø Est. Tubo Tube O.D.	L1	D1	D2
LL	100	CRLL04	4	6,0	6,0	-
		CRLL06	6	7,0	8,0	-
		CRLL08	8	7,0	10,0	-
L/S	900	CRLS06	6	9,5	10,0	10,0
		CRLS08	8	9,5	12,0	12,0
	800	CRLS10	10	10,0	14,0	14,0
	650	CRLS12	12	10,0	16,0	16,0
L	450	CRL15	15	10,0	19,0	20,0
		CRL18	18	10,0	23,0	23,0
	300	CRL22	22	10,5	27,0	27,0
		CRL28	28	11,0	33,0	33,0
		CRL35	35	13,0	41,0	41,0
		CRL42	42	13,0	48,0	48,0
S	700	CRS14	14	10,0	19,0	19,0
	650	CRS16	16	10,5	21,0	21,0
	420	CRS20	20	12,0	26,0	26,0
		CRS25	25	12,0	32,0	32,0
		CRS30	30	13,0	36,0	38,0
		CRS38	38	13,0	44,0	48,0

ANELLO TAGLIENTE CON GUARN.PIANA IN FKM E TRATTAMENTO INNOVATIVO
CUTTING RING WITH FKM CAPTIVE SEAL AND SPECIAL TREATMENT

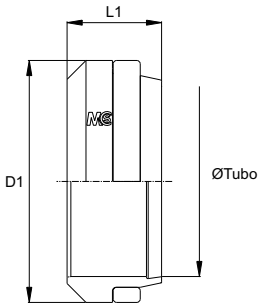

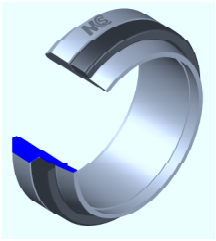

Serie Series	Bar W.P.	Codice Part Number	Ø Est. Tubo Tube O.D.	L1	D1	D2
L	630	CRL06Evo	6	9,5	10,0	10,0
		CRL08Evo	8	9,5	12,0	12,0
		CRL10Evo	10	10,0	14,0	14,0
	450	CRL12Evo	12	10,0	16,0	16,0
		CRL15Evo	15	10,0	19,0	20,0
		CRL18Evo	18	10,0	23,0	23,0
	300	CRL22Evo	22	10,5	27,0	27,0
		CRL28Evo	28	11,0	33,0	33,0
		CRL35Evo	35	13,0	41,0	41,0
		CRL42Evo	42	13,0	48,0	48,0
S	900	CRS06Evo	6	9,5	10,0	10,0
		CRS08Evo	8	9,5	12,0	12,0
	800	CRS10Evo	10	10,0	14,0	14,0
	700	CRS12Evo	12	10,0	16,0	16,0
		CRS14Evo	14	10,0	19,0	19,0
	650	CRS16Evo	16	10,5	21,0	21,0
	420	CRS20Evo	20	12,0	26,0	26,0
		CRS25Evo	25	12,0	32,0	32,0
		CRS30Evo	30	13,0	36,0	38,0
		CRS38Evo	38	13,0	44,0	48,0

DADO
NUT

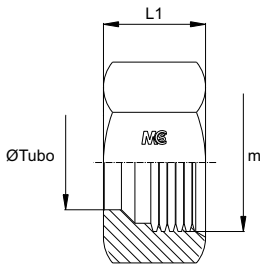

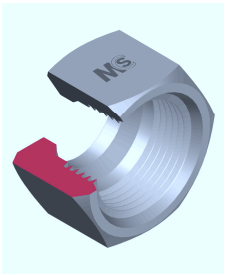

Serie Series	Bar W.P.	Codice Part Number	Ø Est. Tubo Tube O.D.	Filetto Thread	L1	CH1
LL	100	CNLL04	4	m 8x1,0	11,0	10
		CNLL06	6	m 10x1,0	11,5	12
		CNLL08	8	m 12x1,0	12,0	14
L	630	CNL06	6	m 12x1,5	14,5	14
		CNL08	8	m 14x1,5	14,5	17
		CNL10	10	m 16x1,5	15,5	19
	450	CNL12	12	m 18x1,5	15,5	22
		CNL15	15	m 22x1,5	17,0	27
		CNL18	8	m 26x1,5	18,0	32
	300	CNL22	22	m 30x2,0	20,0	36
		CNL28	28	m 36x2,0	21,0	41
		CNL35	35	m 45x2,0	24,0	50
		CNL42	42	m 52x2,0	24,0	60
S	900	CNS06	6	m 14x1,5	16,5	17
		CNS08	8	m 16x1,5	16,5	19
	800	CNS10	10	m 18x1,5	17,5	22
	700	CNS12	12	m 20x1,5	17,5	24
		CNS14	14	m 22x1,5	20,5	27
	650	CNS16	16	m 24x1,5	20,5	30
	420	CNS20	20	m 30x2,0	24,0	36
		CNS25	25	m 36x2,0	27,0	46
		CNS30	30	m 42x2,0	29,0	50
		CNS38	38	m 52x2,0	32,5	60

ADATTATORE MASCHIO DI ESTREMITÀ - Serie L

Filetto Gas Cilindrico Svasato 60°

MALE STUD COUPLING - L Series

BSP Parallel Thread 60° Cone

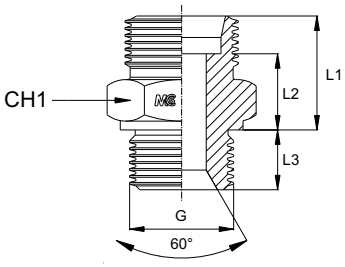

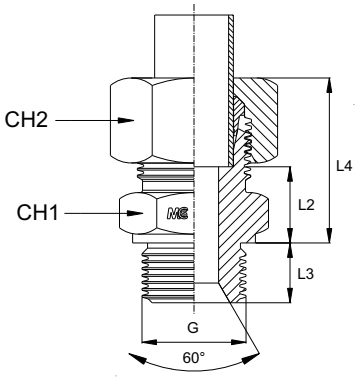

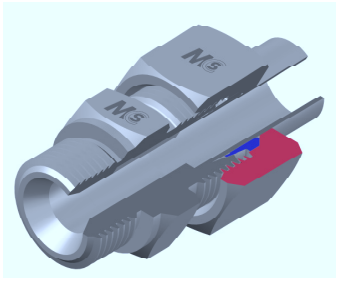

Serie Series	Bar W.P.	Codice (Corpo) Part Number (Body)	Codice (Completo) Part Number (Complete)	Ø Est. Tubo Tube O.D.	G	L1	L2	L3	L4	CH1	CH2
L	315	GE06LRG1/8B	GE06LRG1/8	6	1/8"	15,5	8,5	8,0	23,0	14	14
		GE06LRG1/4B	GE06LRG1/4	6	1/4"	17,0	10,0	12,0	24,5	19	14
		GE06LRG3/8B	GE06LRG3/8	6	3/8"	18,5	11,5	12,0	26,0	22	14
		GE06LRG1/2B	GE06LRG1/2	6	1/2"	19,0	12,0	14,0	29,0	27	14
		GE08LRG1/8B	GE08LRG1/8	8	1/8"	16,5	9,5	8,0	24,5	14	17
		GE08LRG1/4B	GE08LRG1/4	8	1/4"	17,0	10,0	12,0	25,0	19	17
		GE08LRG3/8B	GE08LRG3/8	8	3/8"	18,5	11,5	12,0	26,5	22	17
		GE08LRG1/2B	GE08LRG1/2	8	1/2"	19,0	12,0	14,0	27,0	27	17
		GE10LRG1/8B	GE10LRG1/8	10	1/8"	17,5	10,5	8,0	25,5	17	19
		GE10LRG1/4B	GE10LRG1/4	10	1/4"	18,0	11,0	12,0	26,0	19	19
		GE10LRG3/8B	GE10LRG3/8	10	3/8"	19,5	12,5	12,0	27,5	22	19
		GE10LRG1/2B	GE10LRG1/2	10	1/2"	20,0	13,0	14,0	28,0	27	19
		GE12LRG1/8B	GE12LRG1/8	12	1/8"	18,0	11,0	8,0	29,0	19	22
		GE12LRG1/4B	GE12LRG1/4	12	1/4"	19,0	12,0	12,0	26,5	19	22
		GE12LRG3/8B	GE12LRG3/8	12	3/8"	19,5	12,5	12,0	27,0	22	22
		GE12LRG1/2B	GE12LRG1/2	12	1/2"	20,0	13,0	14,0	27,5	27	22
		GE12LRG3/4B	GE12LRG3/4	12	3/4"	21,0	14,0	16,0	31,0	32	22
		GE15LRG1/4B	GE15LRG1/4	15	1/4"	20,0	13,0	12,0	32,0	24	27
		GE15LRG3/8B	GE15LRG3/8	15	3/8"	20,5	13,5	12,0	28,5	24	27
		GE15LRG1/2B	GE15LRG1/2	15	1/2"	21,0	14,0	14,0	29,0	27	27
		GE15LRG3/4B	GE15LRG3/4	15	3/4"	22,0	15,0	16,0	30,0	32	27
		GE18LRG3/8B	GE18LRG3/8	18	3/8"	20,0	12,5	12,0	31,0	27	32
		GE18LRG1/2B	GE18LRG1/2	18	1/2"	22,0	14,5	14,0	31,0	27	32
		GE18LRG3/4B	GE18LRG3/4	18	3/4"	22,0	14,5	16,0	31,0	32	32
		GE18LRG1B	GE18LRG1	18	1"	24,0	16,5	18,0	31,0	41	32
	160	GE22LRG3/8B	GE22LRG3/8	22	3/8"	23,5	16,0	12,0	49,0	32	36
		GE22LRG1/2B	GE22LRG1/2	22	1/2"	24,0	16,5	14,0	33,0	32	36
		GE22LRG3/4B	GE22LRG3/4	22	3/4"	24,0	16,5	16,0	33,0	32	36
		GE22LRG1B	GE22LRG1	22	1"	25,0	17,5	18,0	34,0	41	36
		GE22LRG11/4B	GE22LRG11/4	22	1,1/4"	26,0	18,5	20,0	39,0	50	36
		GE28LRG1/2B	GE28LRG1/2	28	1/2"	25,0	17,5	14,0	33,0	41	41
		GE28LRG3/4B	GE28LRG3/4	28	3/4"	25,0	17,5	16,0	34,0	41	41
		GE28LRG1B	GE28LRG1	28	1"	25,0	17,5	18,0	34,0	41	41
		GE28LRG11/4B	GE28LRG11/4	28	1,1/4"	26,0	18,5	20,0	39,0	50	41
		GE35LRG3/4B	GE35LRG3/4	35	3/4"	29,0	18,5	16,0	42,0	46	50
		GE35LRG1B	GE35LRG1	35	1"	28,0	17,5	18,0	39,0	46	50
		GE35LRG11/4B	GE35LRG11/4	35	1,1/4"	28,0	17,5	20,0	39,0	50	50
		GE35LRG11/2B	GE35LRG11/2	35	1,1/2"	30,0	19,5	22,0	44,0	55	50
		GE42LRG1B	GE42LRG1	42	1"	30,0	19,0	18,0	47,0	55	60
		GE42LRG11/4B	GE42LRG11/4	42	1,1/4"	30,0	19,0	20,0	42,0	55	60
		GE42LRG11/2B	GE42LRG11/2	42	1,1/2"	30,0	19,0	22,0	42,0	55	60

ADATTATORE MASCHIO DI ESTREMITÀ - Serie S

Filetto Gas Cilindrico Svasato 60°

MALE STUD COUPLING - S Series

BSP Parallel Thread 60° Cone

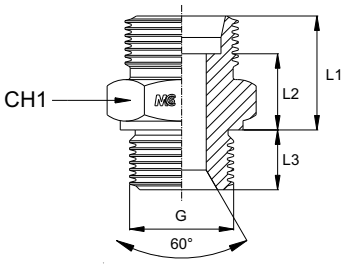

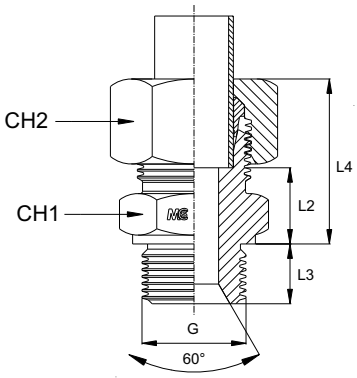

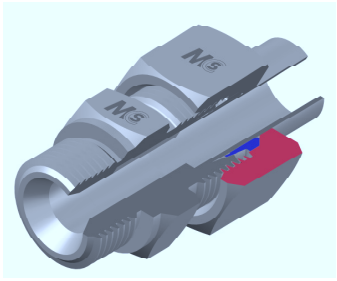

Serie Series	Bar W.P.	Codice (Corpo) Part Number (Body)	Codice (Completo) Part Number (Complete)	Ø Est. Tubo Tube O.D.	G	L1	L2	L3	L4	CH1	CH2
S	630	GE06SRG1/8B	GE06SRG1/8	6	1/8"	20,0	13,0	8,0	28,0	14	17
		GE06SRG1/4B	GE06SRG1/4	6	1/4"	20,0	13,0	12,0	28,0	19	17
		GE06SRG3/8B	GE06SRG3/8	6	3/8"	22,5	15,5	12,0	30,0	22	19
		GE06SRG1/2B	GE06SRG1/2	6	1/2"	24,0	17,0	14,0	34,0	27	19
		GE08SRG1/8B	GE08SRG1/8	8	1/8"	21,0	14,0	8,0	30,0	17	19
		GE08SRG1/4B	GE08SRG1/4	8	1/4"	22,0	15,0	12,0	30,0	19	19
		GE08SRG3/8B	GE08SRG3/8	8	3/8"	22,5	15,5	12,0	30,5	22	19
		GE08SRG1/2B	GE08SRG1/2	8	1/2"	22,0	15,0	14,0	34,0	27	19
		GE10SRG1/8B	GE10SRG1/8	10	1/8"	21,0	13,5	8,0	28,0	19	22
		GE10SRG1/4B	GE10SRG1/4	10	1/4"	22,0	14,5	12,0	30,5	19	22
		GE10SRG3/8B	GE10SRG3/8	10	3/8"	22,5	15,0	12,0	31,0	22	22
		GE10SRG1/2B	GE10SRG1/2	10	1/2"	25,0	17,5	14,0	33,5	27	22
		GE10SRG3/4B	GE10SRG3/4	10	3/4"	22,0	14,5	16,0	36,0	32	22
		GE12SRG1/4B	GE12SRG1/4	12	1/4"	24,0	16,5	12,0	32,5	22	24
		GE12SRG3/8B	GE12SRG3/8	12	3/8"	24,5	17,0	12,0	33,0	22	24
		GE12SRG1/2B	GE12SRG1/2	12	1/2"	25,0	17,5	14,0	33,5	27	24
		GE12SRG3/4B	GE12SRG3/4	12	3/4"	25,0	17,5	16,0	36,0	32	24
		GE14SRG3/8B	GE14SRG3/8	14	3/8"	26,5	18,5	12,0	36,5	24	27
		GE14SRG1/2B	GE14SRG1/2	14	1/2"	27,0	19,0	14,0	37,0	27	27
		GE14SRG3/4B	GE14SRG3/4	14	3/4"	27,0	19,0	16,0	36,5	32	27
	400	GE16SRG1/4B	GE16SRG1/4	16	1/4"	26,0	17,5	12,0	38,0	27	30
		GE16SRG3/8B	GE16SRG3/8	16	3/8"	26,5	18,0	12,0	36,5	27	30
		GE16SRG1/2B	GE16SRG1/2	16	1/2"	27,0	18,5	14,0	37,0	27	30
		GE16SRG3/4B	GE16SRG3/4	16	3/4"	29,0	20,5	16,0	39,0	32	30
		GE16SRG1B	GE16SRG1	16	1"	31,0	22,5	18,0	43,5	41	30
		GE20SRG3/8B	GE20SRG3/8	20	3/8"	28,5	18,0	12,0	40,5	32	36
		GE20SRG1/2B	GE20SRG1/2	20	1/2"	31,0	20,5	14,0	42,0	32	36
		GE20SRG3/4B	GE20SRG3/4	20	3/4"	31,0	20,5	16,0	42,0	32	36
		GE20SRG1B	GE20SRG1	20	1"	33,0	22,5	18,0	44,0	41	36
		GE20SRG11/4B	GE20SRG11/4	20	1,1/4"	33,0	22,5	20,0	50,0	50	36
		GE25SRG1/2B	GE25SRG1/2	25	1/2"	35,0	23,0	14,0	47,0	41	46
		GE25SRG3/4B	GE25SRG3/4	25	3/4"	35,0	23,0	16,0	47,0	41	46
		GE25SRG1B	GE25SRG1	25	1"	35,0	23,0	18,0	47,0	41	46
		GE25SRG11/4B	GE25SRG11/4	25	1,1/4"	35,0	23,0	20,0	47,0	50	46
		GE30SRG3/4B	GE30SRG3/4	30	3/4"	39,0	25,5	16,0	50,0	46	50
		GE30SRG1B	GE30SRG1	30	1"	37,0	23,5	18,0	50,0	46	50
		GE30SRG11/4B	GE30SRG11/4	30	1,1/4"	37,0	23,5	20,0	50,0	50	50
		GE30SRG11/2B	GE30SRG11/2	30	1,1/2"	37,0	23,5	22,0	50,0	55	50
		GE38SRG11/2B	GE38SRG11/2	38	1,1/2"	42,0	26,0	22,0	57,0	55	60
	315	GE38SRG1B	GE38SRG1	38	1"	42,0	26,0	18,0	42,0	46	50
		GE38SRG11/4B	GE38SRG11/4	38	1,1/4"	42,0	26,0	20,0	57,0	55	60
		GE38SRG2B	GE38SRG2	38	2"	-	-	-	-	70	60

ADATTATORE MASCHIO DI ESTREMITÀ - Serie L

Filetto Metrico Cilindrico

MALE STUD COUPLING - L Series

Metric Parallel Thread

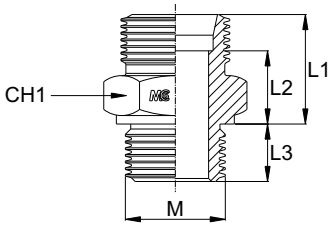

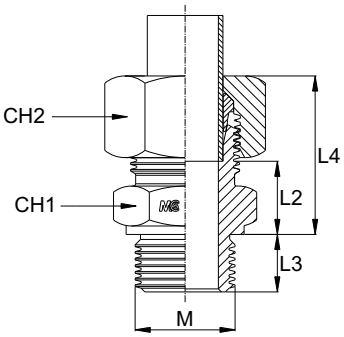

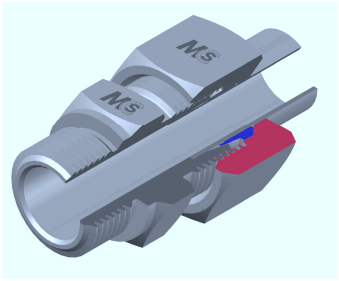

Serie Series	Bar W.P.	Codice (Corpo) Part Number (Body)	Codice (Completo) Part Number (Complete)	Ø Est. Tubo Tube O.D.	M	L1	L2	L3	L4	CH1	CH2
L	315	GE06LM101B	GE06LM101	6	10x1,0	15,5	8,5	8,0	23,0	14	14
		GE06LM1215B	GE06LM1215	6	12x1,5	17,0	10,0	12,0	25,0	17	14
		GE06LM1415B	GE06LM1415	6	14x1,5	17,0	10,0	12,0	27,0	19	14
		GE08LM101B	GE08LM101	8	10x1,0	16,5	8,5	8,0	24,5	14	17
		GE08LM1215B	GE08LM1215	8	12x1,5	17,0	10,0	12,0	25,0	17	17
		GE08LM1415B	GE08LM1415	8	14x1,5	17,0	10,0	12,0	27,0	19	17
		GE08LM1615B	GE08LM1615	8	16x1,5	18,5	11,5	12,0	27,5	22	17
		GE08LM1815B	GE08LM1815	8	18x1,5	18,5	11,5	12,0	26,5	24	17
		GE10LM101B	GE10LM101	10	10x1,0	18,0	11,0	8,0	26,0	17	19
		GE10LM1215B	GE10LM1215	10	12x1,5	18,5	11,5	12,0	28,5	17	19
		GE10LM1415B	GE10LM1415	10	14x1,5	18,0	11,0	12,0	26,0	19	19
		GE10LM1615B	GE10LM1615	10	16x1,5	19,5	12,5	12,0	27,5	22	19
		GE10LM1815B	GE10LM1815	10	18x1,5	19,5	12,5	12,0	27,5	24	19
		GE10LM2215B	GE10LM2215	10	22x1,5	21,0	14,0	14,0	29,0	27	19
		GE12LM1215B	GE12LM1215	12	12x1,5	20,0	13,0	12,0	28,0	19	22
		GE12LM1415B	GE12LM1415	12	14x1,5	19,5	12,5	12,0	27,0	19	22
		GE12LM1615B	GE12LM1615	12	16x1,5	19,5	12,5	12,0	27,0	22	22
		GE12LM1815B	GE12LM1815	12	18x1,5	19,5	12,5	12,0	27,0	24	22
		GE12LM2215B	GE12LM2215	12	22x1,5	21,0	14,0	14,0	28,5	27	22
		GE15LM1615B	GE15LM1615	15	16x1,5	20,0	13,0	12,0	28,0	24	27
		GE15LM1815B	GE15LM1815	15	18x1,5	20,5	13,5	12,0	29,0	24	27
		GE15LM2215B	GE15LM2215	15	22x1,5	22,0	15,0	14,0	30,0	27	27
		GE18LM1815B	GE18LM1815	18	18x1,5	21,5	14,0	12,0	30,5	27	32
		GE18LM2215B	GE18LM2215	18	22x1,5	22,0	14,5	14,0	31,0	27	32
		GE18LM2615B	GE18LM2615	18	26x1,5	22,0	14,5	16,0	31,0	32	32
	160	GE22LM2215B	GE22LM2215	22	22x1,5	24,0	16,5	14,0	33,0	32	36
		GE22LM2615B	GE22LM2615	22	26x1,5	24,0	16,5	16,0	33,0	32	36
		GE28LM332B	GE28LM332	28	33x2,0	25,0	17,5	18,0	34,0	41	41
		GE35LM422B	GE35LM422	35	42x2,0	28,0	17,5	20,0	39,0	50	50
		GE42LM482B	GE42LM482	42	48x2,0	30,0	19,0	22,0	42,0	55	60

ADATTATORE MASCHIO DI ESTREMITÀ - Serie S

Filetto Metrico Cilindrico

MALE STUD COUPLING - S Series

Metric Parallel Thread

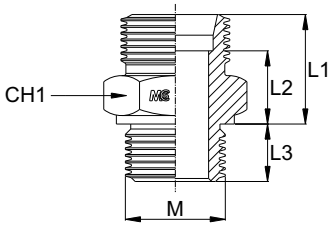

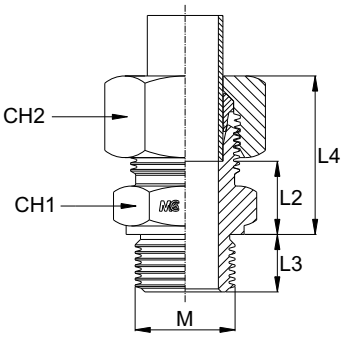

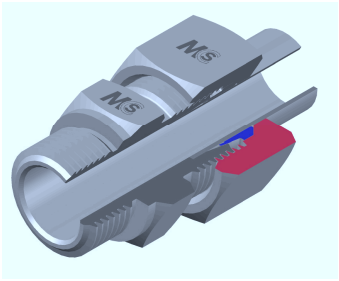

Serie Series	Bar W.P.	Codice (Corpo) Part Number (Body)	Codice (Completo) Part Number (Complete)	Ø Est. Tubo Tube O.D.	M	L1	L2	L3	L4	CH1	CH2
S	630	GE06SM1215B	GE06SM1215	6	12x1,5	20,0	13,0	12,0	28,0	17	17
		GE06SM1415B	GE06SM1415	6	14x1,5	20,0	13,0	12,0	30,0	17	17
		GE08SM1215B	GE08SM1215	8	12x1,5	22,0	15,0	12,0	32,0	17	19
		GE08SM1415B	GE08SM1415	8	14x1,5	22,0	15,0	12,0	30,0	19	19
		GE08SM1615B	GE08SM1615	8	16x1,5	-	-	12,0	-	22	19
		GE10SM1415B	GE10SM1415	10	14x1,5	-	-	12,0	-	19	22
		GE10SM1615B	GE10SM1615	10	16x1,5	22,5	15,0	12,0	31,0	22	22
		GE10SM1815B	GE10SM1815	10	18x1,5	25,0	17,5	12,0	-	24	22
		GE12SM1415B	GE12SM1415	12	14x1,5	23,5	16,0	12,0	33,0	22	24
		GE12SM1615B	GE12SM1615	12	16x1,5	24,5	17,0	12,0	35,5	22	24
		GE12SM1815B	GE12SM1815	12	18x1,5	24,5	17,0	12,0	33,0	24	24
		GE12SM2015B	GE12SM2015	12	20x1,5	-	-	14,0	-	27	24
		GE12SM2215B	GE12SM2215	12	22x1,5	25,0	17,5	14,0	33,5	27	24
		GE14SM2015B	GE14SM2015	14	20x1,5	27,0	19,0	14,0	37,0	27	27
		GE14SM2215B	GE14SM2215	14	22x1,5	-	-	14,0	-	27	27
	400	GE16SM1815B	GE16SM1815	16	18x1,5	26,5	18,0	12,0	36,5	27	30
		GE16SM2215B	GE16SM2215	16	22x1,5	27,0	18,5	14,0	37,0	27	30
		GE20SM2215B	GE20SM2215	20	22x1,5	31,0	20,5	14,0	42,0	32	36
		GE20SM272B	GE20SM272	20	27x2,0	31,0	20,5	16,0	42,0	32	36
		GE25SM272B	GE25SM272	25	27x2,0	35,0	23,0	16,0	47,0	41	46
		GE25SM332B	GE25SM332	25	33x2,0	35,0	23,0	18,0	47,0	41	46
		GE30SM332B	GE30SM332	30	33x2,0	37,0	23,5	18,0	50,0	46	50
		GE30SM422B	GE30SM422	30	42x2,0	37,0	23,5	20,0	50,0	50	50
	315	GE38SM482B	GE38SM482	38	48x2,0	42,0	26,0	22,0	57,0	55	60

ADATTATORE MASCHIO DI ESTREMITÀ CON GUARNIZIONE PIANA - Serie L

Filetto Gas Cilindrico

MALE STUD COUPLING WITH CAPTIVE SEAL - L Series

BSP Parallel Thread

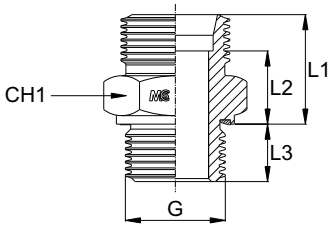

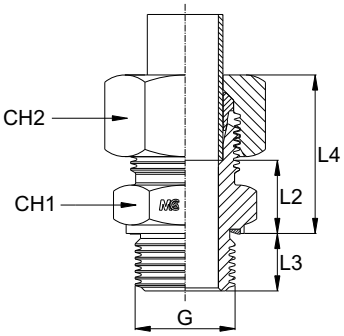

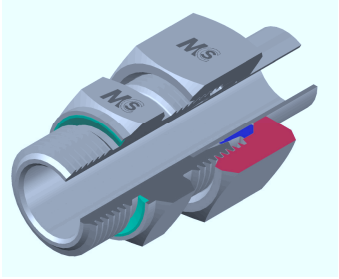

Serie Series	Bar W.P.	Codice (Corpo) Part Number (Body)	Codice (Completo) Part Number (Complete)	Ø Est. Tubo Tube O.D.	G	L1	L2	L3	L4	CH1	CH2
L	630	GE06LRG1/8VB	GE06LRG1/8V	6	1/8"	15,5	8,5	8,0	23,0	14	14
		GE06LRG1/4VB	GE06LRG1/4V	6	1/4"	17,0	10,0	12,0	24,5	19	14
	450	GE06LRG3/8VB	GE06LRG3/8V	6	3/8"	18,5	11,5	12,0	26,0	22	14
		GE06LRG1/2VB	GE06LRG1/2V	6	1/2"	19,0	12,0	14,0	29,0	27	14
	630	GE08LRG1/8VB	GE08LRG1/8V	8	1/8"	16,5	9,5	8,0	24,5	14	17
		GE08LRG1/4VB	GE08LRG1/4V	8	1/4"	17,0	10,0	12,0	25,0	19	17
	450	GE08LRG3/8VB	GE08LRG3/8V	8	3/8"	18,5	11,5	12,0	26,5	22	17
		GE08LRG1/2VB	GE08LRG1/2V	8	1/2"	19,0	12,0	14,0	27,0	27	17
	630	GE10LRG1/8VB	GE10LRG1/8V	10	1/8"	17,5	10,5	8,0	25,5	17	19
		GE10LRG1/4VB	GE10LRG1/4V	10	1/4"	18,0	11,0	12,0	26,0	19	19
	450	GE10LRG3/8VB	GE10LRG3/8V	10	3/8"	19,5	12,5	12,0	27,5	22	19
		GE10LRG1/2VB	GE10LRG1/2V	10	1/2"	20,0	13,0	14,0	28,0	27	19
	300	GE10LRG3/4VB	GE10LRG3/4V	10	3/4"	21,0	14,0	16,0	28,0	32	19
	450	GE12LRG1/8VB	GE12LRG1/8V	12	1/8"	18,0	11,0	8,0	29,0	19	22
		GE12LRG1/4VB	GE12LRG1/4V	12	1/4"	19,0	12,0	12,0	26,5	19	22
		GE12LRG3/8VB	GE12LRG3/8V	12	3/8"	19,5	12,5	12,0	27,0	22	22
		GE12LRG1/2VB	GE12LRG1/2V	12	1/2"	20,0	13,0	14,0	27,5	27	22
	300	GE12LRG3/4VB	GE12LRG3/4V	12	3/4"	21,0	14,0	16,0	31,0	32	22
	450	GE15LRG1/4VB	GE15LRG1/4V	15	1/4"	20,0	13,0	12,0	32,0	24	27
		GE15LRG1/2VB	GE15LRG1/2V	15	1/2"	21,0	14,0	14,0	29,0	27	27
		GE15LRG3/8VB	GE15LRG3/8V	15	3/8"	20,5	13,5	12,0	28,5	24	27
	300	GE15LRG3/4VB	GE15LRG3/4V	15	3/4"	22,0	15,0	16,0	30,0	32	27
		GE15LRG1VB	GE15LRG1V	15	1"	-	-	18,0	-	41	27
	450	GE18LRG3/8VB	GE18LRG3/8V	18	3/8"	20,0	12,5	12,0	33,0	27	32
		GE18LRG1/2VB	GE18LRG1/2V	18	1/2"	22,0	14,5	14,0	31,0	27	32
	300	GE18LRG3/4VB	GE18LRG3/4V	18	3/4"	22,0	14,5	16,0	31,0	32	32
		GE18LRG1VB	GE18LRG1V	18	1"	24,0	16,5	18,0	34,0	41	32
	300	GE22LRG3/8VB	GE22LRG3/8V	22	3/8"	23,5	16,0	12,0	49,0	32	36
		GE22LRG1/2VB	GE22LRG1/2V	22	1/2"	24,0	16,5	14,0	33,0	32	36
		GE22LRG3/4VB	GE22LRG3/4V	22	3/4"	24,0	16,5	16,0	33,0	32	36
		GE22LRG1VB	GE22LRG1V	22	1"	25,0	17,5	18,0	34,0	41	36
		GE22LRG11/4VB	GE22LRG11/4V	22	1,1/4"	25,0	17,5	20,0	34,0	50	36
		GE28LRG1/2VB	GE28LRG1/2V	28	1/2"	25,0	17,5	14,0	33,0	41	41
		GE28LRG3/4VB	GE28LRG3/4V	28	3/4"	25,0	17,5	16,0	34,0	41	41
		GE28LRG1VB	GE28LRG1V	28	1"	25,0	17,5	18,0	34,0	41	41
		GE28LRG11/4VB	GE28LRG11/4V	28	1,1/4"	26,0	18,5	20,0	35,0	50	41
		GE35LRG3/4VB	GE35LRG3/4V	35	3/4"	29,0	18,5	16,0	38,0	46	50
		GE35LRG1VB	GE35LRG1V	35	1"	28,0	17,5	18,0	39,0	46	50
		GE35LRG11/4VB	GE35LRG11/4V	35	1,1/4"	28,0	17,5	20,0	39,0	50	50
		GE35LRG11/2VB	GE35LRG11/2V	35	1,1/2"	30,0	19,5	22,0	44,0	55	50
		GE42LRG1VB	GE42LRG1V	42	1"	30,0	19,0	18,0	47,0	55	60
		GE42LRG11/4VB	GE42LRG11/4V	42	1,1/4"	30,0	19,0	20,0	42,0	55	60
		GE42LRG11/2VB	GE42LRG11/2V	42	1,1/2"	30,0	19,0	22,0	42,0	55	60
		GE42LRG2VB	GE42LRG2V	42	2"	-	-	-	-	70	60

ADATTATORE MASCHIO DI ESTREMITÀ CON GUARNIZIONE PIANA - Serie S

Filetto Gas Cilindrico

MALE STUD COUPLING WITH CAPTIVE SEAL - S Series

BSP Parallel Thread

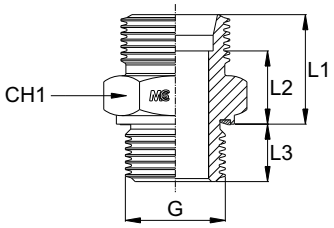

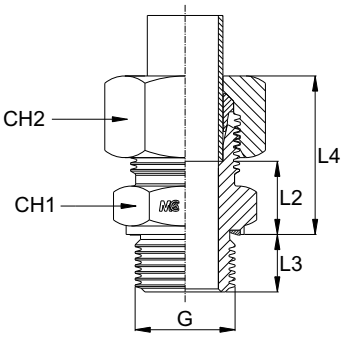

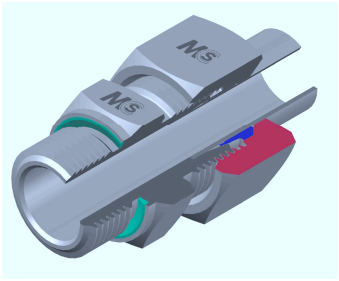

Serie Series	Bar W.P.	Codice (Corpo) Part Number (Body)	Codice (Completo) Part Number (Complete)	Ø Est. Tubo Tube O.D.	G	L1	L2	L3	L4	CH1	CH2
S	900	GE06SRG1/8VB	GE06SRG1/8V	6	1/8"	20,0	13,0	8,0	28,0	14	17
		GE06SRG1/4VB	GE06SRG1/4V	6	1/4"	20,0	13,0	12,0	28,0	19	17
		GE06SRG3/8VB	GE06SRG3/8V	6	3/8"	22,5	15,5	12,0	30,0	22	19
	630	GE06SRG1/2VB	GE06SRG1/2V	6	1/2"	24,0	17,0	14,0	34,0	27	19
		GE08SRG1/8VB	GE08SRG1/8V	8	1/8"	21,0	14,0	8,0	30,0	17	19
		GE08SRG1/4VB	GE08SRG1/4V	8	1/4"	22,0	15,0	12,0	30,0	19	19
		GE08SRG3/8VB	GE08SRG3/8V	8	3/8"	22,5	15,5	12,0	30,5	22	19
		GE10SRG1/8VB	GE10SRG1/8V	10	1/8"	21,0	13,5	8,0	30,5	19	22
		GE10SRG1/4VB	GE10SRG1/4V	10	1/4"	22,0	14,5	12,0	30,5	19	22
		GE10SRG3/8VB	GE10SRG3/8V	10	3/8"	22,5	15,0	12,0	31,0	22	22
		GE10SRG1/2VB	GE10SRG1/2V	10	1/2"	25,0	17,5	14,0	33,5	27	22
		GE10SRG3/4VB	GE10SRG3/4V	10	3/4"	25,0	17,5	16,0	36,0	32	22
		GE12SRG1/4VB	GE12SRG1/4V	12	1/4"	24,0	16,5	12,0	32,5	22	24
		GE12SRG3/8VB	GE12SRG3/8V	12	3/8"	24,5	17,0	12,0	33,0	22	24
		GE12SRG1/2VB	GE12SRG1/2V	12	1/2"	25,0	17,5	14,0	33,5	27	24
		GE14SRG3/8VB	GE14SRG3/8V	14	3/8"	26,5	18,5	12,0	36,5	24	27
		GE14SRG1/2VB	GE14SRG1/2V	14	1/2"	27,0	19,0	14,0	37,0	27	27
		GE14SRG3/4VB	GE14SRG3/4V	14	3/4"	27,0	19,0	16,0	39,0	32	27
	400	GE16SRG1/4VB	GE16SRG1/4V	16	1/4"	26,0	17,5	12,0	38,0	27	30
		GE16SRG3/8VB	GE16SRG3/8V	16	3/8"	26,5	18,0	12,0	36,5	27	30
		GE16SRG1/2VB	GE16SRG1/2V	16	1/2"	27,0	18,5	14,0	37,0	27	30
		GE16SRG3/4VB	GE16SRG3/4V	16	3/4"	29,0	20,5	16,0	39,0	32	30
		GE16SRG1VB	GE16SRG1V	16	1"	31,0	22,5	18,0	43,5	41	30
		GE20SRG3/8VB	GE20SRG3/8V	20	3/8"	28,5	18,0	12,0	-	32	36
		GE20SRG1/2VB	GE20SRG1/2V	20	1/2"	31,0	20,5	14,0	42,0	32	36
		GE20SRG3/4VB	GE20SRG3/4V	20	3/4"	31,0	20,5	16,0	42,0	32	36
		GE20SRG1VB	GE20SRG1V	20	1"	33,0	22,5	18,0	44,0	41	36
		GE20SRG11/4VB	GE20SRG11/4V	20	1,1/4"	33,0	22,5	20,0	44,0	50	36
		GE25SRG1/2VB	GE25SRG1/2V	25	1/2"	35,0	23,0	14,0	47,0	41	46
		GE25SRG3/4VB	GE25SRG3/4V	25	3/4"	35,0	23,0	16,0	47,0	41	46
		GE25SRG1VB	GE25SRG1V	25	1"	35,0	23,0	18,0	47,0	41	46
		GE25SRG11/4VB	GE25SRG11/4V	25	1,1/4"	35,0	23,0	20,0	47,0	50	46
		GE30SRG3/4VB	GE30SRG3/4V	30	3/4"	39,0	25,5	16,0	-	46	50
		GE30SRG1VB	GE30SRG1V	30	1"	37,0	23,5	18,0	50,0	46	50
		GE30SRG11/4VB	GE30SRG11/4V	30	1,1/4"	37,0	23,5	20,0	50,0	50	50
		GE30SRG11/2VB	GE30SRG11/2V	30	1,1/2"	37,0	23,5	22,0	53,0	55	50
	315	GE38SRG1VB	GE38SRG1V	38	1"	42,0	26,0	18,0	42,0	46	50
		GE38SRG11/4VB	GE38SRG11/4V	38	1,1/4"	42,0	26,0	20,0	57,0	55	60
		GE38SRG11/2VB	GE38SRG11/2V	38	1,1/2"	42,0	26,0	22,0	57,0	55	60
	250	GE38SRG2VB	GE38SRG2V	38	2"	-	-	-	-	70	60

ADATTATORE MASCHIO DI ESTREMITÀ CON GUARNIZIONE PIANA - Serie L

Filetto Metrico Cilindrico

MALE STUD COUPLING WITH CAPTIVE SEAL - L Series

Metric Parallel Thread

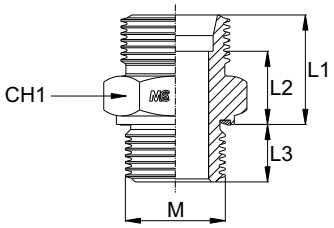

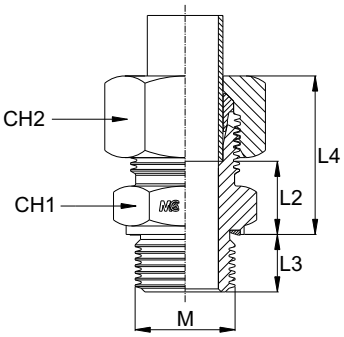

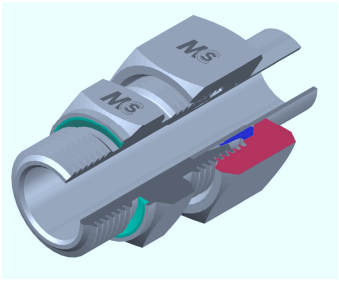

Serie Series	Bar W.P.	Codice (Corpo) Part Number (Body)	Codice (Completo) Part Number (Complete)	Ø Est. Tubo Tube O.D.	M	L1	L2	L3	L4	CH1	CH2
L	315	GE06LM101VB	GE06LM101V	6	10x1,0	15,5	8,5	8,0	23,0	14	14
		GE06LM1215VB	GE06LM1215V	6	12x1,5	17,0	10,0	12,0	-	17	14
		GE06LM1415VB	GE06LM1415V	6	14x1,5	17,0	10,0	12,0	27,0	19	14
		GE08LM101VB	GE08LM101V	8	10x1,0	16,5	8,5	8,0	24,5	14	17
		GE08LM1215VB	GE08LM1215V	8	12x1,5	17,0	10,0	12,0	25,0	17	17
		GE08LM1415VB	GE08LM1415V	8	14x1,5	17,0	10,0	12,0	27,0	19	17
		GE08LM1615VB	GE08LM1615V	8	16x1,5	18,5	11,5	12,0	27,5	22	17
		GE08LM1815VB	GE08LM1815V	8	18x1,5	18,5	11,5	12,0	26,5	24	17
		GE10LM101VB	GE10LM101V	10	10x1,0	18,0	11,0	8,0	-	17	19
		GE10LM1215VB	GE10LM1215V	10	12x1,5	18,5	11,5	12,0	28,5	17	19
		GE10LM1415VB	GE10LM1415V	10	14x1,5	18,0	11,0	12,0	26,0	19	19
		GE10LM1615VB	GE10LM1615V	10	16x1,5	19,5	12,5	12,0	27,5	22	19
		GE10LM1815VB	GE10LM1815V	10	18x1,5	19,5	12,5	12,0	27,5	24	19
		GE10LM2215VB	GE10LM2215V	10	22x1,5	21,0	14,0	14,0	29,0	27	19
		GE12LM1215VB	GE12LM1215V	12	12x1,5	20,0	13,0	12,0	28,0	19	22
		GE12LM1415VB	GE12LM1415V	12	14x1,5	19,5	12,5	12,0	27,0	19	22
		GE12LM1615VB	GE12LM1615V	12	16x1,5	19,5	12,5	12,0	27,0	22	22
		GE12LM1815VB	GE12LM1815V	12	18x1,5	19,5	12,5	12,0	27,0	24	22
		GE12LM2215VB	GE12LM2215V	12	22x1,5	21,0	14,0	14,0	28,5	27	22
		GE15LM1615VB	GE15LM1615V	15	16x1,5	20,0	13,0	12,0	28,0	24	27
		GE15LM1815VB	GE15LM1815V	15	18x1,5	20,5	13,5	12,0	29,0	24	27
		GE15LM2215VB	GE15LM2215V	15	22x1,5	22,0	15,0	14,0	30,0	27	27
		GE18LM1815VB	GE18LM1815V	18	18x1,5	21,5	14,0	12,0	30,5	27	32
		GE18LM2215VB	GE18LM2215V	18	22x1,5	22,0	14,5	14,0	31,0	27	32
		GE18LM2615VB	GE18LM2615V	18	26x1,5	22,0	14,5	16,0	-	32	32
	160	GE22LM2215VB	GE22LM2215V	22	22x1,5	24,0	16,5	14,0	33,0	32	36
		GE22LM2615VB	GE22LM2615V	22	26x1,5	24,0	16,5	16,0	33,0	32	36
		GE28LM332VB	GE28LM332V	28	33x2,0	25,0	17,5	18,0	34,0	41	41
		GE35LM422VB	GE35LM422V	35	42x2,0	28,0	17,5	20,0	39,0	50	50
		GE42LM482VB	GE42LM482V	42	48x2,0	30,0	19,0	22,0	42,0	55	60

ADATTATORE MASCHIO DI ESTREMITÀ CON GUARNIZIONE PIANA - Serie S

Filetto Metrico Cilindrico

MALE STUD COUPLING WITH CAPTIVE SEAL - S Series

Metric Parallel Thread

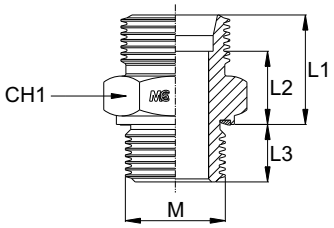

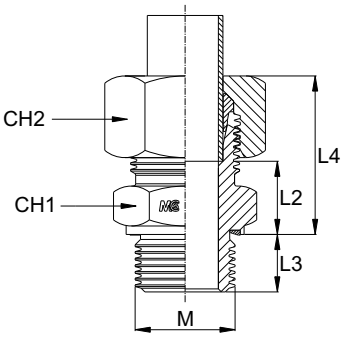

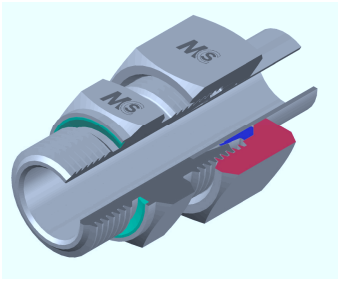

Serie Series	Bar W.P.	Codice (Corpo) Part Number (Body)	Codice (Completo) Part Number (Complete)	Ø Est. Tubo Tube O.D.	M	L1	L2	L3	L4	CH1	CH2
S	630	GE06SM1215VB	GE06SM1215V	6	12x1,5	20,0	13,0	12,0	28,0	17	17
		GE06SM1415VB	GE06SM1415V	6	14x1,5	-	-	12,0	-	19	17
		GE08SM1215VB	GE08SM1215V	8	12x1,5	22,0	15,0	12,0	32,0	17	19
		GE08SM1415VB	GE08SM1415V	8	14x1,5	22,0	15,0	12,0	30,0	19	19
		GE08SM1615VB	GE08SM1615V	8	16x1,5	-	-	12,0	-	22	19
		GE10SM1415VB	GE10SM1415V	10	14x1,5	-	-	12,0	-	19	22
		GE10SM1615VB	GE10SM1615V	10	16x1,5	22,5	15,0	12,0	31,0	22	22
		GE10SM1815VB	GE10SM1815V	10	18x1,5	25,0	17,5	12,0	-	24	22
		GE12SM1415VB	GE12SM1415V	12	14x1,5	23,5	16,0	12,0	33,0	22	24
		GE12SM1615VB	GE12SM1615V	12	16x1,5	24,5	17,0	12,0	35,5	22	24
		GE12SM1815VB	GE12SM1815V	12	18x1,5	24,5	17,0	12,0	33,0	24	24
		GE12SM2015VB	GE12SM2015V	12	20x1,5	25,0	17,5	14,0	36,0	27	24
		GE12SM2215VB	GE12SM2215V	12	22x1,5	25,0	17,5	14,0	33,5	27	24
		GE14SM2015VB	GE14SM2015V	14	20x1,5	27,0	19,0	14,0	37,0	27	27
		GE14SM2215VB	GE14SM2215V	14	22x1,5	26,5	18,5	14,0	39,0	27	27
	400	GE16SM1815VB	GE16SM1815V	16	18x1,5	26,5	18,0	12,0	36,5	27	30
		GE16SM2215VB	GE16SM2215V	16	22x1,5	27,0	18,5	14,0	37,0	27	30
		GE20SM2215VB	GE20SM2215V	20	22x1,5	31,0	20,5	14,0	42,0	32	36
		GE20SM272VB	GE20SM272V	20	27x2,0	31,0	20,5	16,0	42,0	32	36
		GE25SM272VB	GE25SM272V	25	27x2,0	35,0	23,0	16,0	47,0	41	46
		GE25SM332VB	GE25SM332V	25	33x2,0	35,0	23,0	18,0	47,0	41	46
		GE30SM332VB	GE30SM332V	30	33x2,0	37,0	23,5	18,0	50,0	46	50
		GE30SM422VB	GE30SM422V	30	42x2,0	37,0	23,5	20,0	50,0	50	50
	315	GE38SM482VB	GE38SM482V	38	48x2,0	42,0	26,0	22,0	57,0	55	60

ADATTATORE FEMMINA DI ESTREMITÀ - Serie L

Filetto Gas Cilindrico

FEMALE STUD COUPLING - L Series

BSP Parallel Thread

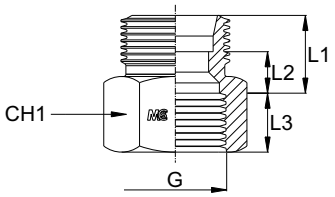

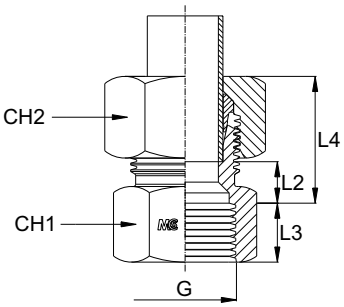

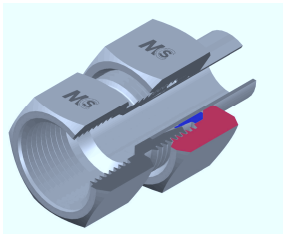

Serie Series	Bar W.P.	Codice (Corpo) Part Number (Body)	Codice (Completo) Part Number (Complete)	Ø Est. Tubo Tube O.D.	G	L1	L2	L3	L4	CH1	CH2
L	315	GAI06LRG1/8B	GAI06LRG1/8	6	1/8"	16,0	9,0	10,0	23,5	14	14
		GAI08LRG1/4B	GAI08LRG1/4	8	1/4"	17,0	10,0	14,0	25,0	19	17
		GAI10LRG1/4B	GAI10LRG1/4	10	1/4"	18,0	11,0	14,0	26,0	19	19
		GAI12LRG3/8B	GAI12LRG3/8	12	3/8"	19,0	12,0	14,0	26,5	24	22
		GAI15LRG1/2B	GAI15LRG1/2	15	1/2"	21,0	14,0	17,0	29,0	27	27
		GAI18LRG1/2B	GAI18LRG1/2	18	1/2"	21,0	13,5	17,0	30,0	27	32
	160	GAI22LRG3/4B	GAI22LRG3/4	22	3/4"	24,0	16,5	19,0	33,0	36	36
		GAI28LRG1B	GAI28LRG1	28	1"	23,5	16,0	21,5	32,5	41	41
		GAI35LRG11/4B	GAI35LRG11/4	35	1,1/4"	28,5	18,0	23,5	39,5	55	50
		GAI42LRG11/2B	GAI42LRG11/2	42	1,1/2"	28,5	17,5	25,5	40,5	60	60

ADATTATORE FEMMINA DI ESTREMITÀ - Serie S

Filetto Gas Cilindrico

FEMALE STUD COUPLING - S Series

BSP Parallel Thread

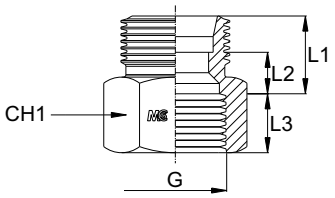

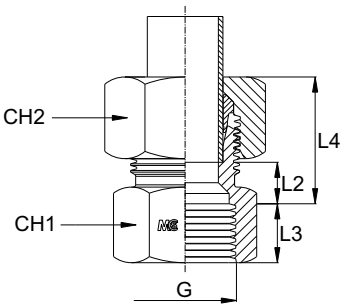

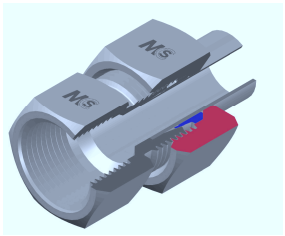

Serie Series	Bar W.P.	Codice (Corpo) Part Number (Body)	Codice (Completo) Part Number (Complete)	Ø Est. Tubo Tube O.D.	G	L1	L2	L3	L4	CH1	CH2
S	630	GAI06SRG1/4B	GAI06SRG1/4	6	1/4"	19,0	12,0	14,0	27,0	19	17
		GAI08SRG1/4B	GAI08SRG1/4	8	1/4"	19,0	12,0	14,0	27,0	19	19
		GAI10SRG3/8B	GAI10SRG3/8	10	3/8"	20,0	12,5	14,0	28,5	24	22
		GAI12SRG3/8B	GAI12SRG3/8	12	3/8"	20,0	12,5	14,0	28,5	24	24
		GAI14SRG1/2B	GAI14SRG1/2	14	1/2"	23,0	15,0	17,0	33,0	30	27
	400	GAI16SRG1/2B	GAI16SRG1/2	16	1/2"	23,0	14,5	17,0	33,0	30	30
		GAI20SRG3/4B	GAI20SRG3/4	20	3/4"	26,0	15,5	19,0	37,0	36	36
		GAI25SRG1B	GAI25SRG1	25	1"	27,5	15,5	21,5	39,5	41	46
		GAI30SRG11/4B	GAI30SRG11/4	30	1,1/4"	32,5	19,0	23,5	45,5	55	50
	315	GAI38SRG11/2B	GAI38SRG11/2	38	1,1/2"	34,5	18,5	25,5	49,5	60	60

ADATTATORE FEMMINA DI ESTREMITÀ - Serie L

Filetto Metrico Cilindrico

FEMALE STUD COUPLING - L Series

Metric Parallel Thread

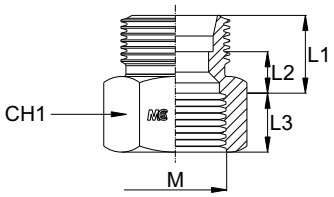

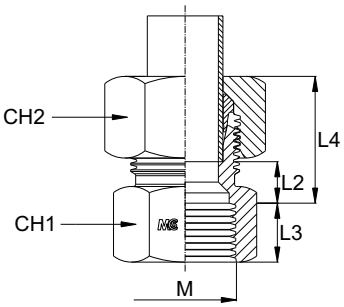

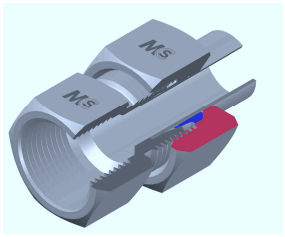

Serie Series	Bar W.P.	Codice (Corpo) Part Number (Body)	Codice (Completo) Part Number (Complete)	Ø Est. Tubo Tube O.D.	M	L1	L2	L3	L4	CH1	CH2
L	315	GAI06LM101B	GAI06LM101	6	10x1,0	16,0	9,0	10,0	23,5	14	14
		GAI08LM1215B	GAI08LM1215	8	12x1,5	16,5	9,5	14,5	24,5	17	17
		GAI10LM1415B	GAI10LM1415	10	14x1,5	17,5	10,5	14,5	25,5	19	19
		GAI12LM1615B	GAI12LM1615	12	16x1,5	18,5	11,5	14,5	26,0	22	22
		GAI15LM1815B	GAI15LM1815	15	18x1,5	23,5	16,5	14,5	31,5	24	27
		GAI18LM2215B	GAI18LM2215	18	22x1,5	21,5	14,0	16,5	30,5	30	32
	160	GAI22LM2615B	GAI22LM2615	22	26x1,5	23,5	16,0	18,5	32,5	32	36
		GAI28LM332B	GAI28LM332	28	33x2,0	24,0	16,5	21,0	33,0	41	41
		GAI35LM422B	GAI35LM422	35	42x2,0	28,0	17,5	23,0	39,0	55	50
		GAI42LM482B	GAI42LM482	42	48x2,0	29,0	18,0	25,0	41,0	60	60

ADATTATORE FEMMINA DI ESTREMITÀ - Serie S

Filetto Metrico Cilindrico

FEMALE STUD COUPLING - S Series

Metric Parallel Thread

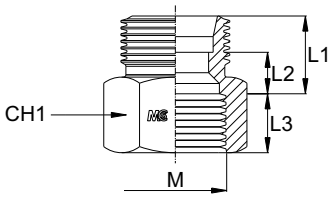

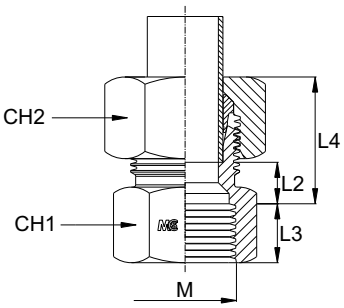

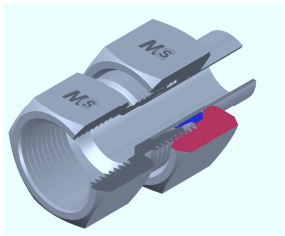

Serie Series	Bar W.P.	Codice (Corpo) Part Number (Body)	Codice (Completo) Part Number (Complete)	Ø Est. Tubo Tube O.D.	M	L1	L2	L3	L4	CH1	CH2
S	630	GAI06SM1215B	GAI06SM1215	6	12x1,5	18,5	11,5	14,5	26,5	17	17
		GAI08SM1415B	GAI08SM1415	8	14x1,5	18,5	11,5	14,5	26,5	19	19
		GAI10SM1615B	GAI10SM1615	10	16x1,5	19,5	12,0	14,5	28,0	22	22
		GAI12SM1815B	GAI12SM1815	12	18x1,5	19,5	12,0	14,5	28,0	24	24
		GAI14SM2015B	GAI14SM2015	14	20x1,5	23,5	15,5	16,5	33,5	27	27
	400	GAI16SM2215B	GAI16SM2215	16	22x1,5	23,5	15,0	16,5	33,5	30	30
		GAI20SM272B	GAI20SM272	20	27x2,0	26,0	15,5	19,0	37,0	36	36
		GAI25SM332B	GAI25SM332	25	33x2,0	28,0	16,0	21,0	40,0	41	46
		GAI30SM422B	GAI30SM422	30	42x2,0	33,0	19,5	23,0	46,0	55	50
	315	GAI38SM482B	GAI38SM482	38	48x2,0	35,0	19,0	25,0	50,0	60	60

ADATTATORE FEMMINA DI ESTREMITÀ - Serie L

Filetto NPT

FEMALE STUD COUPLING - L Series

NPT Thread

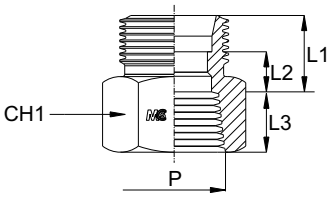

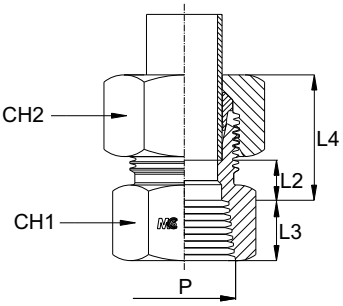

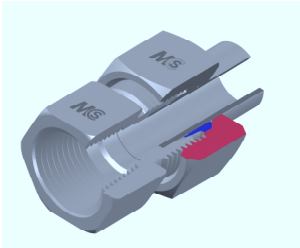

Serie Series	Bar W.P.	Codice (Corpo) Part Number (Body)	Codice (Completo) Part Number (Complete)	Ø Est. Tubo Tube O.D.	P	L1	L2	L3	L4	CH1	CH2
L	315	GAI06L1/8NPTB	GAI06L1/8NPT	6	1/8"	16,0	9,0	10,0	23,5	14	14
		GAI08L1/4NPTB	GAI08L1/4NPT	8	1/4"	17,0	10,0	14,2	25,0	19	17
		GAI10L1/4NPTB	GAI10L1/4NPT	10	1/4"	18,0	11,0	14,2	26,0	19	19
		GAI12L3/8NPTB	GAI12L3/8NPT	12	3/8"	19,0	12,0	14,2	26,5	24	22
		GAI15L1/2NPTB	GAI15L1/2NPT	15	1/2"	21,0	14,0	17,5	29,0	27	27
		GAI18L1/2NPTB	GAI18L1/2NPT	18	1/2"	21,0	13,5	17,5	30,0	27	32
	160	GAI22L3/4NPTB	GAI22L3/4NPT	22	3/4"	24,0	16,5	22,0	33,0	36	36
		GAI28L1NPTB	GAI28L1NPT	28	1"	23,5	16,0	23,0	32,5	41	41
		GAI35L11/4NPTB	GAI35L11/4NPT	35	1,1/4"	28,5	18,0	23,0	39,5	55	50
		GAI42L11/2NPTB	GAI42L11/2NPT	42	1,1/2"	28,5	17,5	23,0	40,5	60	60

ADATTATORE FEMMINA DI ESTREMITÀ - Serie S

Filetto NPT

FEMALE STUD COUPLING - S Series

NPT Thread

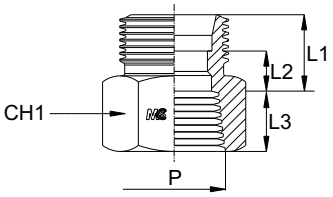

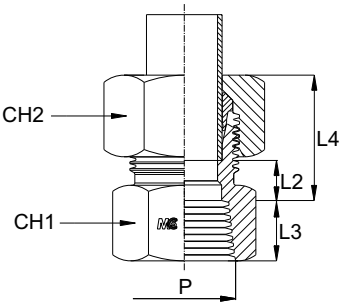

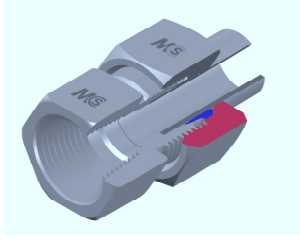

Serie Series	Bar W.P.	Codice (Corpo) Part Number (Body)	Codice (Completo) Part Number (Complete)	Ø Est. Tubo Tube O.D.	P	L1	L2	L3	L4	CH1	CH2
S	630	GAI06S1/4NPTB	GAI06S1/4NPT	6	1/4"	19,0	12,0	14,2	27,0	19	17
		GAI08S1/4NPTB	GAI08S1/4NPT	8	1/4"	19,0	12,0	14,2	27,0	19	19
		GAI10S3/8NPTB	GAI10S3/8NPT	10	3/8"	20,0	12,5	14,2	28,5	24	22
		GAI12S3/8NPTB	GAI12S3/8NPT	12	3/8"	20,0	12,5	14,2	28,5	24	24
		GAI14S1/2NPTB	GAI14S1/2NPT	14	1/2"	23,0	15,0	17,5	33,0	30	27
	400	GAI16S1/2NPTB	GAI16S1/2NPT	16	1/2"	23,0	14,5	17,5	33,0	30	30
		GAI20S3/4NPTB	GAI20S3/4NPT	20	3/4"	26,0	15,5	22,0	37,0	36	36
		GAI25S1NPTB	GAI25S1NPT	25	1"	27,5	15,5	23,0	39,5	41	46
		GAI30S11/4NPTB	GAI30S11/4NPT	30	1,1/4"	32,5	19,0	23,0	45,5	55	50
	315	GAI38S11/2NPTB	GAI38S11/2NPT	38	1,1/2"	34,5	18,5	23,0	49,5	60	60

ADATTATORE MASCHIO DI ESTREMITÀ CON O'RING - Serie L

Filetto UNF

MALE STUD COUPLING WITH O'RING - L Series

UNF Thread

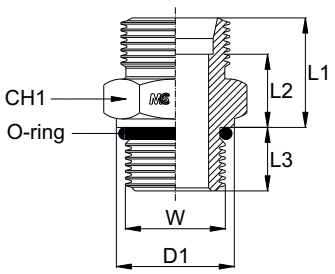

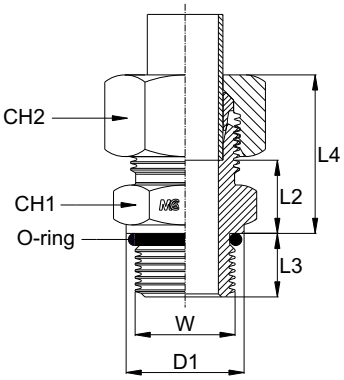

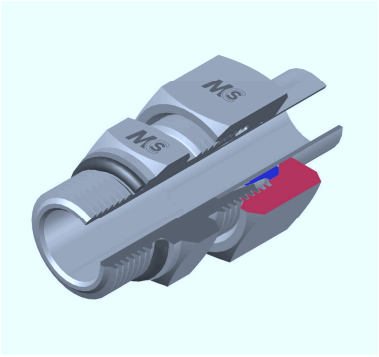

Serie Series	Bar W.P.	Codice (Corpo) Part Number (Body)	Codice (Completo) Part Number (Complete)	Ø Est. Tubo Tube O.D.	W	D1	L1	L2	L3	L4	CH1	CH2	O'Ring
L	315	GE06L7/16UNFB	GE06L7/16UNF	6	7/16"-20	13,8	16,9	9,9	9,1	24,5	14	14	8,92x1,83
		GE06L1/2UNFB	GE06L1/2UNF	6	1/2"-20	16,8	-	-	9,2	-	17	14	10,52x1,83
		GE06L9/16UNFB	GE06L9/16UNF	6	9/16"-18	18,8	-	-	10,0	-	19	14	11,90x1,98
		GE08L7/16UNFB	GE08L7/16UNF	8	7/16"-20	13,8	16,9	9,9	9,1	25,0	14	17	8,92x1,83
		GE08L1/2UNFB	GE08L1/2UNF	8	1/2"-20	16,8	16,9	9,9	9,1	25,0	17	17	10,52x1,83
		GE08L9/16UNFB	GE08L9/16UNF	8	9/16"-18	18,8	17,0	10,0	10,0	25,0	19	17	11,90x1,98
		GE10L7/16UNFB	GE10L7/16UNF	10	7/16"-20	13,8	17,9	10,9	9,1	26,0	17	19	8,92x1,83
		GE10L1/2UNFB	GE10L1/2UNF	10	1/2"-20	16,8	17,9	10,9	9,1	26,0	17	19	10,52x1,83
		GE10L9/16UNFB	GE10L9/16UNF	10	9/16"-18	18,8	18,0	11,0	10,0	26,0	19	19	11,90x1,98
		GE10L3/4UNFB	GE10L3/4UNF	10	3/4"-16	21,8	20,0	13,0	11,2	30,5	24	19	16,36x2,20
		GE12L9/16UNFB	GE12L9/16UNF	12	9/16"-18	18,8	18,0	11,0	10,0	25,5	19	22	11,90x1,98
		GE12L3/4UNFB	GE12L3/4UNF	12	3/4"-16	21,8	19,9	12,9	11,1	27,5	22	22	16,36x2,20
		GE12L7/8UNFB	GE12L7/8UNF	12	7/8"-14	26,8	21,3	14,3	12,7	29,0	27	22	19,18x2,46
		GE15L9/16UNFB	GE15L9/16UNF	15	9/16"-18	18,8	21,0	14,0	10,0	29,0	24	27	11,90x1,98
		GE15L3/4UNFB	GE15L3/4UNF	15	3/4"-16	21,8	20,9	13,9	11,1	29,0	24	27	16,36x2,20
		GE15L7/8UNFB	GE15L7/8UNF	15	7/8"-14	26,8	21,0	14,0	12,7	29,0	27	27	19,18x2,46
		GE18L3/4UNFB	GE18L3/4UNF	18	3/4"-16	21,8	21,9	14,4	11,1	31,0	27	32	16,36x2,20
		GE18L7/8UNFB	GE18L7/8UNF	18	7/8"-14	26,8	22,3	14,8	12,7	31,5	27	32	19,18x2,46
		GE18L11/16UNFB	GE18L11/16UNF	18	1,1/16"-12	31,8	22,0	14,5	15,0	31,0	32	32	23,47x2,95
	160	GE22L7/8UNFB	GE22L7/8UNF	22	7/8"-14	26,8	24,3	16,8	12,7	33,5	32	36	19,18x2,46
		GE22L11/16UNFB	GE22L11/16UNF	22	1,1/16"-12	31,8	23,9	16,4	15,1	33,0	32	36	23,47x2,95
		GE22L15/16UNFB	GE22L15/16UNF	22	1,5/16"-12	40,8	24,9	17,4	15,1	34,0	41	36	29,74x2,95
		GE28L7/8UNFB	GE28L7/8UNF	28	7/8"-14	26,8	25,0	17,5	12,7	34,0	41	41	19,18x2,46
		GE28L11/16UNFB	GE28L11/16UNF	28	1,1/16"-12	31,8	24,9	17,4	15,1	34,0	41	41	23,47x2,95
		GE28L15/16UNFB	GE28L15/16UNF	28	1,5/16"-12	40,8	24,9	17,4	15,1	34,0	41	41	29,74x2,95
		GE28L15/8UNFB	GE28L15/8UNF	28	1,5/8"-12	49,8	25,0	17,5	15,0	34,0	50	41	37,46x3,00
		GE35L11/16UNFB	GE35L11/16UNF	35	1,1/16"-12	31,8	28,0	17,5	15,0	39,0	46	50	23,47x2,95
		GE35L15/16UNFB	GE35L15/16UNF	35	1,5/16"-12	40,8	27,9	17,4	15,1	39,0	46	50	29,74x2,95
		GE35L15/8UNFB	GE35L15/8UNF	35	1,5/8"-12	49,8	27,9	17,4	15,1	39,0	50	50	37,46x3,00
		GE42L15/8UNFB	GE42L15/8UNF	42	1,5/8"-12	49,8	29,9	18,9	15,1	42,0	55	60	37,46x3,00
		GE42L17/8UNFB	GE42L17/8UNF	42	1,7/8"-12	54,8	29,9	18,9	15,1	42,0	55	60	43,69x3,00

ADATTATORE MASCHIO DI ESTREMITÀ CON O'RING - Serie S

Filetto UNF

MALE STUD COUPLING WITH O'RING - S Series

UNF Thread

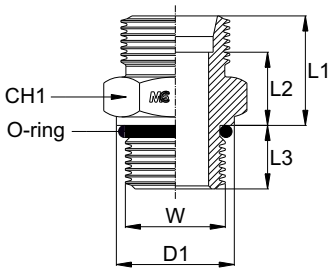

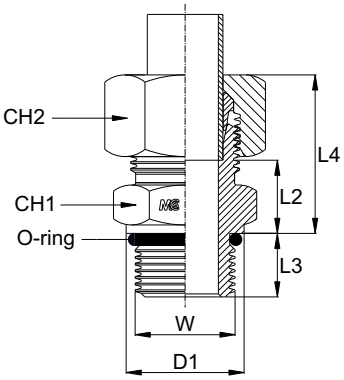

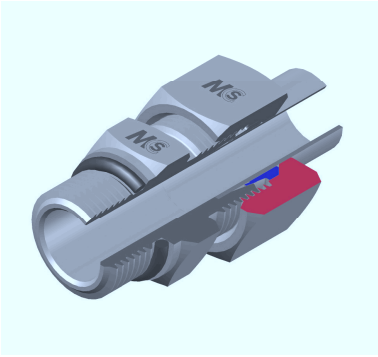

Serie Series	Bar W.P.	Codice (Corpo) Part Number (Body)	Codice (Completo) Part Number (Complete)	Ø Est. Tubo Tube O.D.	W	D1	L1	L2	L3	L4	CH1	CH2	O'Ring
S	630	GE06S7/16UNFB	GE06S7/16UNF	6	7/16"-20	13,8	20,0	13,0	9,2	28,0	17	17	8,92x1,83
		GE06S1/2UNFB	GE06S1/2UNF	6	1/2"-20	16,8	21,9	14,9	9,1	30,0	17	17	10,52x1,83
		GE06S9/16UNFB	GE06S9/16UNF	6	9/16"-18	18,8	-	-	10,0	-	19	17	11,90x1,98
		GE08S7/16UNFB	GE08S7/16UNF	8	7/16"-20	13,8	21,9	14,9	9,1	30,0	17	19	8,92x1,83
		GE08S1/2UNFB	GE08S1/2UNF	8	1/2"-20	16,8	21,9	14,9	9,1	30,0	17	19	10,52x1,83
		GE08S9/16UNFB	GE08S9/16UNF	8	9/16"-18	18,8	-	-	10,0	-	19	19	11,90x1,98
		GE10S9/16UNFB	GE10S9/16UNF	10	9/16"-18	18,8	22,0	14,5	10,0	30,5	19	22	11,90x1,98
		GE10S3/4UNFB	GE10S3/4UNF	10	3/4"-16	21,8	22,5	15,0	11,2	31,0	24	22	16,36x2,20
		GE12S9/16UNFB	GE12S9/16UNF	12	9/16"-18	18,8	22,0	14,5	10,0	30,5	22	24	11,90x1,98
		GE12S3/4UNFB	GE12S3/4UNF	12	3/4"-16	21,8	24,9	17,4	11,1	33,5	22	24	16,36x2,20
		GE12S7/8UNFB	GE12S7/8UNF	12	7/8"-14	26,8	22,3	14,8	12,7	32,5	27	24	19,18x2,46
		GE14S9/16UNFB	GE14S9/16UNF	14	9/16"-18	18,8	27,0	19,0	10,0	37,0	24	27	11,90x1,98
		GE14S3/4UNFB	GE14S3/4UNF	14	3/4"-16	21,8	23,9	15,9	11,1	34,0	24	27	16,36x2,20
	400	GE16S3/4UNFB	GE16S3/4UNF	16	3/4"-16	21,8	23,9	15,4	11,1	34,0	27	30	16,36x2,20
		GE16S7/8UNFB	GE16S7/8UNF	16	7/8"-14	26,8	27,3	18,8	12,7	37,5	27	30	19,18x2,46
		GE16S11/16UNFB	GE16S11/16UNF	16	1,1/16"-12	31,8	27,0	18,5	15,0	37,0	32	30	23,47x2,95
		GE20S3/4UNFB	GE20S3/4UNF	20	3/4"-16	21,8	30,9	20,4	11,1	42,0	32	36	16,36x2,20
		GE20S7/8UNFB	GE20S7/8UNF	20	7/8"-14	26,8	31,3	20,8	12,7	42,5	32	36	19,18x2,46
		GE20S11/16UNFB	GE20S11/16UNF	20	1,1/16"-12	31,8	30,9	20,4	15,1	42,0	32	36	23,47x2,95
		GE20S15/16UNFB	GE20S15/16UNF	20	1,5/16"-12	40,8	33,0	22,5	15,0	-	41	36	29,74x2,95
		GE25S11/16UNFB	GE25S11/16UNF	25	1,1/16"-12	31,8	34,9	22,9	15,1	47,0	36	46	23,47x2,95
		GE25S15/16UNFB	GE25S15/16UNF	25	1,5/16"-12	40,8	34,9	22,9	15,1	47,0	41	46	29,74x2,95
		GE30S11/16UNFB	GE30S11/16UNF	30	1,1/16"-12	31,8	39,5	23,5	15,0	50,0	46	50	23,47x2,95
		GE30S15/16UNFB	GE30S15/16UNF	30	1,5/16"-12	40,8	36,9	23,4	15,1	50,0	46	50	29,74x2,95
		GE30S15/8UNFB	GE30S15/8UNF	30	1,5/8"-12	49,8	36,9	23,4	15,1	50,0	50	50	37,46x3,00
	315	GE38S15/8UNFB	GE38S15/8UNF	38	1,5/8"-12	49,8	41,9	25,9	15,1	57,0	55	60	37,46x3,00
		GE38S17/8UNFB	GE38S17/8UNF	38	1,7/8"-12	54,8	41,9	25,9	15,1	57,0	55	60	43,69x3,00

ADATTATORE DI ESTREMITÀ A CODOLO - Serie L
Filetto NPT

STUD STANDPIPE COUPLING - L Series
NPT Thread

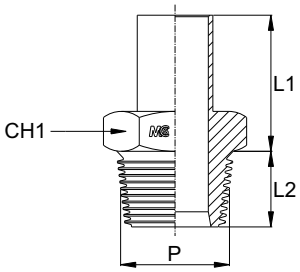

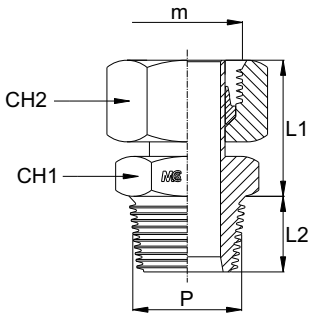

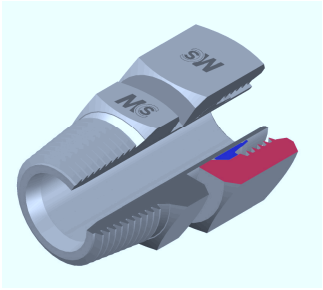

Serie Series	Bar W.P.	Codice (Corpo) Part Number (Body)	Codice (Completo) Part Number (Complete)	Ø Est. Tubo Tube O.D.	m	P	L1	L2	CH1	CH2
L	315	EVGE06L1/8NPTB	EVGE06L1/8NPT	6	12x1,5	1/8”	25,0	10,0	14	14
		EVGE06L1/4NPTB	EVGE06L1/4NPT	6	12x1,5	1/4”	25,0	15,0	14	14
		EVGE08L1/4NPTB	EVGE08L1/4NPT	8	14x1,5	1/4”	27,5	15,0	14	17
		EVGE10L1/4NPTB	EVGE10L1/4NPT	10	16x1,5	1/4”	25,5	15,0	14	19
		EVGE12L1/4NPTB	EVGE12L1/4NPT	12	18x1,5	1/4”	27,0	15,0	14	22
		EVGE12L3/8NPTB	EVGE12L3/8NPT	12	18x1,5	3/8”	31,5	15,0	19	22
		EVGE12L1/2NPTB	EVGE12L1/2NPT	12	18x1,5	1/2”	30,0	20,0	22	22
		EVGE15L3/8NPTB	EVGE15L3/8NPT	15	22x1,5	3/8”	-	15,3	19	27
		EVGE15L1/2NPTB	EVGE15L1/2NPT	15	22x1,5	1/2”	29,0	19,5	22	27
		EVGE18L1/2NPTB	EVGE18L1/2NPT	18	26x1,5	1/2”	28,5	19,5	22	32
	160	EVGE22L3/4NPTB	EVGE22L3/4NPT	22	30x2,0	3/4”	29,5	20,0	27	36
		EVGE28L1NPTB	EVGE28L1NPT	28	36x2,0	1”	32,0	25,0	36	41
		EVGE35L11/4NPTB	EVGE35L11/4NPT	35	45x2,0	1,1/4”	39,5	25,5	46	50
		EVGE42L11/2NPTB	EVGE42L11/2NPT	42	52x2,0	1,1/2”	43,5	26,0	50	60

ADATTATORE DI ESTREMITÀ A CODOLO - Serie S

Filetto NPT

STUD STANDPIPE COUPLING - S Series

NPT Thread

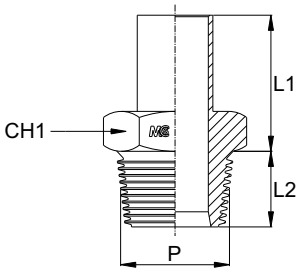

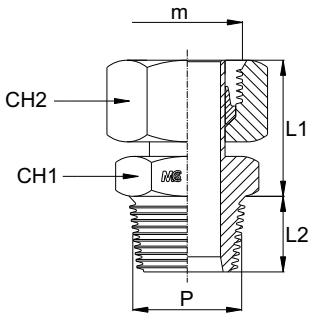

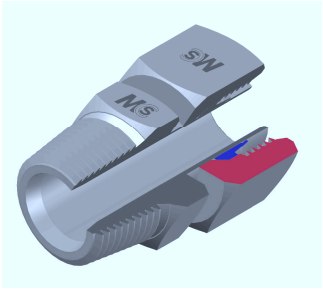

Serie Series	Bar W.P.	Codice (Corpo) Part Number (Body)	Codice (Completo) Part Number (Complete)	Ø Est. Tubo Tube O.D.	m	P	L1	L2	CH1	CH2
S	630	EVGE06S1/4NPTB	EVGE06S1/4NPT	6	14x1,5	1/4"	25,0	15,0	14	17
		EVGE08S1/4NPTB	EVGE08S1/4NPT	8	16x1,5	1/4"	27,5	15,0	14	19
		EVGE10S1/4NPTB	EVGE10S1/4NPT	10	18x1,5	1/4"	24,5	15,0	14	22
		EVGE10S3/8NPTB	EVGE10S3/8NPT	10	18x1,5	3/8"	29,5	15,0	19	22
		EVGE12S1/4NPTB	EVGE12S1/4NPT	12	20x1,5	1/4"	27,0	15,0	14	24
		EVGE12S3/8NPTB	EVGE12S3/8NPT	12	20x1,5	3/8"	31,5	15,0	19	24
		EVGE12S1/2NPTB	EVGE12S1/2NPT	12	20x1,5	1/2"	30,0	20,0	22	24
		EVGE14S1/2NPTB	EVGE14S1/2NPT	14	22x1,5	1/2"	33,5	19,5	22	27
	400	EVGE16S1/2NPTB	EVGE16S1/2NPT	16	24x1,5	1/2"	34,0	19,5	22	30
		EVGE20S3/4NPTB	EVGE20S3/4NPT	20	30x2,0	3/4"	40,0	20,0	27	36
		EVGE25S1NPTB	EVGE25S1NPT	25	36x2,0	1"	45,0	25,0	36	46
		EVGE30S11/4NPTB	EVGE30S11/4NPT	30	42x2,0	1,1/4"	48,0	25,5	46	50
	315	EVGE38S11/2NPTB	EVGE38S11/2NPT	38	52x2,0	1,1/2"	57,0	26,0	50	60

ADATTATORE DI ESTREMITÀ A CODOLO CON GUARNIZIONE PIANA - Serie L
Filetto Gas Cilindrico

STUD STANDPIPE COUPLING WITH CAPTIVE SEAL - L Series
BSP Parallel Thread

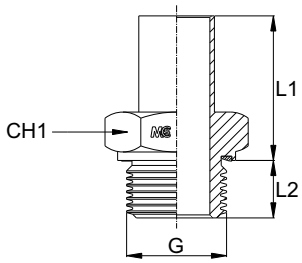

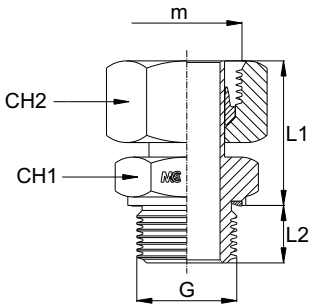

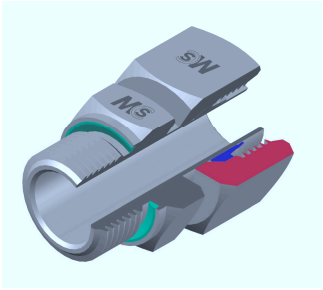

Serie Series	Bar W.P.	Codice (Corpo) Part Number (Body)	Codice (Completo) Part Number (Complete)	Ø Est. Tubo Tube O.D.	m	G	L1	L2	CH1	CH2
L	315	EVGE06LG1/8VB	EVGE06LG1/8V	6	12x1,5	1/8"	24,5	8,0	14	14
		EVGE06LG1/4VB	EVGE06LG1/4V	6	12x1,5	1/4"	27,5	12,0	19	14
		EVGE08LG1/4VB	EVGE08LG1/4V	8	14x1,5	1/4"	29,5	12,0	19	17
		EVGE08LG3/8VB	EVGE08LG3/8V	8	14x1,5	3/8"	30,5	12,0	22	17
		EVGE10LG1/4VB	EVGE10LG1/4V	10	16x1,5	1/4"	27,5	12,0	19	19
		EVGE10LG3/8VB	EVGE10LG3/8V	10	16x1,5	3/8"	32,0	12,0	22	19
		EVGE10LG1/2VB	EVGE10LG1/2V	10	16x1,5	1/2"	33,0	14,0	27	19
		EVGE12LG1/4VB	EVGE12LG1/4V	12	18x1,5	1/4"	30,0	12,0	19	22
		EVGE12LG3/8VB	EVGE12LG3/8V	12	18x1,5	3/8"	34,0	12,0	22	22
		EVGE12LG1/2VB	EVGE12LG1/2V	12	18x1,5	1/2"	34,5	14,0	27	22
		EVGE15LG3/8VB	EVGE15LG3/8V	15	22x1,5	3/8"	33,5	12,0	22	27
		EVGE15LG1/2VB	EVGE15LG1/2V	15	22x1,5	1/2"	32,0	14,0	27	27
		EVGE18LG3/8VB	EVGE18LG3/8V	18	26x1,5	3/8"	32,0	12,0	22	32
		EVGE18LG1/2VB	EVGE18LG1/2V	18	26x1,5	1/2"	31,5	14,0	27	32
		EVGE18LG3/4VB	EVGE18LG3/4V	18	26x1,5	3/4"	36,0	16,0	32	32
	160	EVGE22LG3/8VB	EVGE22LG3/8V	22	30x2,0	3/8"	34,0	12,0	24	36
		EVGE22LG1/2VB	EVGE22LG1/2V	22	30x2,0	1/2"	36,5	14,0	27	36
		EVGE22LG3/4VB	EVGE22LG3/4V	22	30x2,0	3/4"	32,5	16,0	32	36
		EVGE22LG1VB	EVGE22LG1V	22	30x2,0	1"	34,5	18,0	41	36
		EVGE28LG3/4VB	EVGE28LG3/4V	28	36x2,0	3/4"	36,5	16,0	32	41
		EVGE28LG1VB	EVGE28LG1V	28	36x2,0	1"	35,0	18,0	41	41
		EVGE35LG11/4VB	EVGE35LG11/4V	35	45x2,0	1,1/4"	42,5	20,0	50	50
		EVGE42LG11/2VB	EVGE42LG11/2V	42	52x2,0	1,1/2"	46,5	22,0	55	60

ADATTATORE DI ESTREMITÀ A CODOLO CON GUARNIZIONE PIANA - Serie S

Filetto Gas Cilindrico

STUD STANDPIPE COUPLING WITH CAPTIVE SEAL - S Series

BSP Parallel Thread

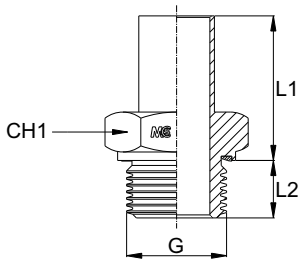

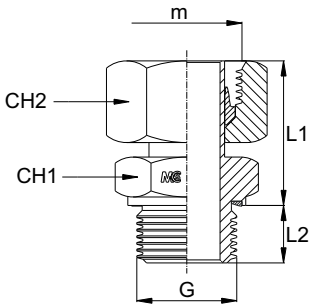

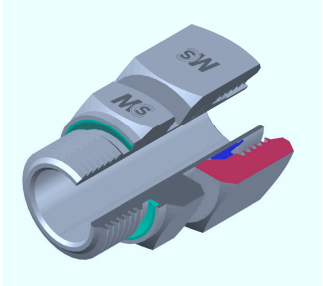

Serie Series	Bar W.P.	Codice (Corpo) Part Number (Body)	Codice (Completo) Part Number (Complete)	Ø Est. Tubo Tube O.D.	m	G	L1	L2	CH1	CH2
S	630	EVGE06SG1/8VB	EVGE06SG1/8V	6	14x1,5	1/8"	24,5	8,0	14	17
		EVGE06SG1/4VB	EVGE06SG1/4V	6	14x1,5	1/4"	27,0	12,0	19	17
		EVGE08SG1/4VB	EVGE08SG1/4V	8	16x1,5	1/4"	29,5	12,0	19	19
		EVGE08SG3/8VB	EVGE08SG3/8V	8	16x1,5	3/8"	30,5	12,0	22	19
		EVGE10SG1/4VB	EVGE10SG1/4V	10	18x1,5	1/4"	27,5	12,0	19	22
		EVGE10SG3/8VB	EVGE10SG3/8V	10	18x1,5	3/8"	32,0	12,0	22	22
		EVGE10SG1/2VB	EVGE10SG1/2V	10	18x1,5	1/2"	32,5	14,0	27	22
		EVGE12SG1/4VB	EVGE12SG1/4V	12	20x1,5	1/4"	30,0	12,0	19	24
		EVGE12SG3/8VB	EVGE12SG3/8V	12	20x1,5	3/8"	34,0	12,0	22	24
		EVGE12SG1/2VB	EVGE12SG1/2V	12	20x1,5	1/2"	34,5	14,0	27	24
		EVGE14SG1/2VB	EVGE14SG1/2V	14	22x1,5	1/2"	36,5	14,0	27	27
	400	EVGE16SG3/8VB	EVGE16SG3/8V	16	24x1,5	3/8"	36,5	12,0	22	30
		EVGE16SG1/2VB	EVGE16SG1/2V	16	24x1,5	1/2"	37,0	14,0	27	30
		EVGE16SG3/4VB	EVGE16SG3/4V	16	24x1,5	3/4"	48,5	16,0	32	30
		EVGE20SG3/4VB	EVGE20SG3/4V	20	30x2,0	3/4"	43,0	16,0	32	36
		EVGE20SG1/2VB	EVGE20SG1/2V	20	30x2,0	1/2"	42,5	14,0	27	36
		EVGE25SG3/4VB	EVGE25SG3/4V	25	36x2,0	3/4"	47,0	16,0	32	46
		EVGE25SG1VB	EVGE25SG1V	25	36x2,0	1"	48,0	18,0	41	46
		EVGE30SG11/4VB	EVGE30SG11/4V	30	42x2,0	1,1/4"	51,0	20,0	50	50
	315	EVGE38SG11/2VB	EVGE38SG11/2V	38	52x2,0	1,1/2"	60,0	22,0	55	60

ADATTATORE DI ESTREMITÀ A CODOLO CON GUARNIZIONE PIANA - Serie L

Filetto Metrico Cilindrico

STUD STANDPIPE COUPLING WITH CAPTIVE SEAL - L Series

Metric Parallel Thread

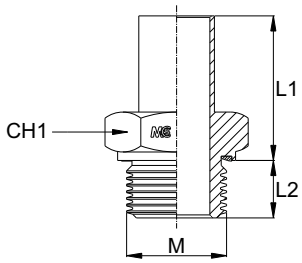

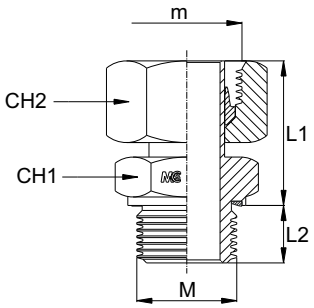

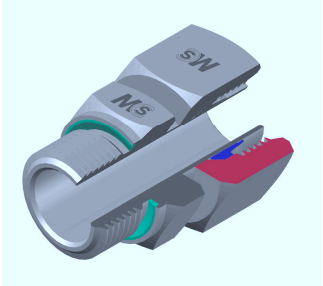

Serie Series	Bar W.P.	Codice (Corpo) Part Number (Body)	Codice (Completo) Part Number (Complete)	Ø Est. Tubo Tube O.D.	m	M	L1	L2	CH1	CH2
L	315	EVGE06LM101VB	EVGE06LM101V	6	12x1,5	10x1,0	24,5	8,0	14	14
		EVGE08LM1215VB	EVGE08LM1215V	8	14x1,5	12x1,5	26,5	12,0	17	17
		EVGE10LM1415VB	EVGE10LM1415V	10	16x1,5	14x1,5	27,5	12,0	19	19
		EVGE12LM1615VB	EVGE12LM1615V	12	18x1,5	16x1,5	30,5	12,0	22	22
		EVGE15LM1815VB	EVGE15LM1815V	15	22x1,5	18x1,5	31,5	12,0	24	27
		EVGE18LM2215VB	EVGE18LM2215V	18	26x1,5	22x1,5	31,5	14,0	27	32
	160	EVGE22LM2615VB	EVGE22LM2615V	22	30x2,0	26x1,5	32,5	16,0	32	36
		EVGE28LM332VB	EVGE28LM332V	28	36x2,0	33x2,0	35,0	18,0	41	41
		EVGE35LM422VB	EVGE35LM422V	35	45x2,0	42x2,0	42,5	20,0	50	50
		EVGE42LM482VB	EVGE42LM482V	42	52x2,0	48x2,0	46,5	22,0	55	60

ADATTATORE DI ESTREMITÀ A CODOLO CON GUARNIZIONE PIANA - Serie S

Filetto Metrico Cilindrico

STUD STANDPIPE COUPLING WITH CAPTIVE SEAL - S Series

Metric Parallel Thread

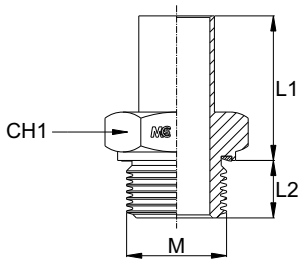

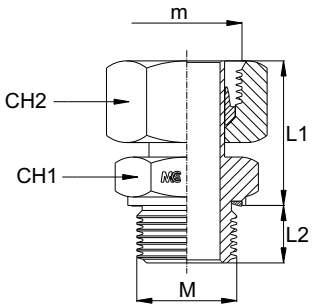

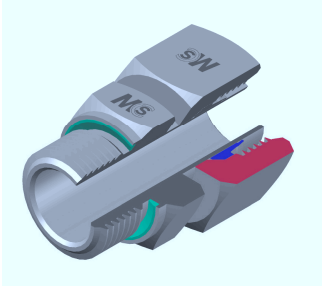

Serie Series	Bar W.P.	Codice (Corpo) Part Number (Body)	Codice (Completo) Part Number (Complete)	Ø Est. Tubo Tube O.D.	m	M	L1	L2	CH1	CH2
S	630	EVGE06SM1215VB	EVGE06SM1215V	6	14x1,5	12x1,5	27,0	12,0	17	17
		EVGE08SM1415VB	EVGE08SM1415V	8	16x1,5	14x1,5	29,5	12,0	19	19
		EVGE10SM1615VB	EVGE10SM1615V	10	18x1,5	16x1,5	32,0	12,0	22	22
		EVGE12SM1815VB	EVGE12SM1815V	12	20x1,5	18x1,5	34,0	12,0	24	24
		EVGE14SM2015VB	EVGE14SM2015V	14	22x1,5	20x1,5	36,5	14,0	27	27
	400	EVGE16SM2215VB	EVGE16SM2215V	16	24x1,5	22x1,5	37,0	14,0	27	30
		EVGE20SM272VB	EVGE20SM272V	20	30x2,0	27x2,0	43,0	16,0	32	36
		EVGE25SM332VB	EVGE25SM332V	25	36x2,0	33x2,0	48,0	18,0	41	46
		EVGE30SM422VB	EVGE30SM422V	30	42x2,0	42x2,0	51,0	20,0	50	50
	315	EVGE38SM482VB	EVGE38SM482V	38	52x2,0	48x2,0	60,0	22,0	55	60

ADATTATORE MASCHIO DI ESTREMITÀ - Serie L

Filetto Gas Conico

MALE STUD COUPLING - L Series

BSP Taper Thread

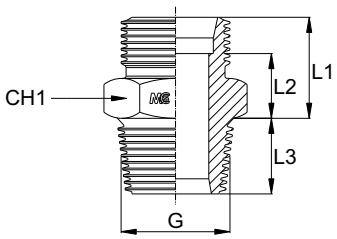

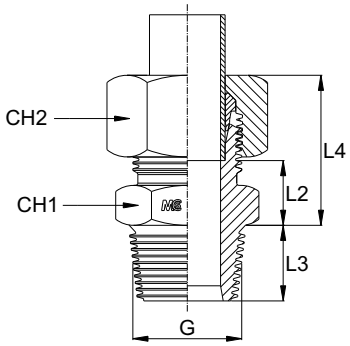

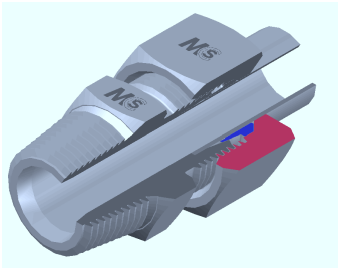

Serie Series	Bar W.P.	Codice (Corpo) Part Number (Body)	Codice (Completo) Part Number (Complete)	Ø Est. Tubo Tube O.D.	G	L1	L2	L3	L4	CH1	CH2
L	315	GE06L1/8BSPTB	GE06L1/8BSPT	6	1/8"	14,0	7,0	8,0	22,0	14	14
		GE06L1/4BSPTB	GE06L1/4BSPT	6	1/4"	15,0	8,0	12,0	22,5	14	14
		GE06L3/8BSPTB	GE06L3/8BSPT	6	3/8"	16,0	9,0	12,0	24,0	17	14
		GE06L1/2BSPTB	GE06L1/2BSPT	6	1/2"	16,0	9,0	14,0	26,0	22	14
		GE08L1/8BSPTB	GE08L1/8BSPT	8	1/8"	15,0	8,0	8,0	22,0	14	17
		GE08L1/4BSPTB	GE08L1/4BSPT	8	1/4"	15,0	8,0	12,0	23,0	17	17
		GE08L3/8BSPTB	GE08L3/8BSPT	8	3/8"	16,0	9,0	12,0	25,0	19	17
		GE08L1/2BSPTB	GE08L1/2BSPT	8	1/2"	16,0	9,0	14,0	25,0	22	17
		GE10L1/8BSPTB	GE10L1/8BSPT	10	1/8"	16,0	9,0	8,0	24,0	17	19
		GE10L1/4BSPTB	GE10L1/4BSPT	10	1/4"	16,0	9,0	12,0	24,0	17	19
		GE10L3/8BSPTB	GE10L3/8BSPT	10	3/8"	17,0	10,0	12,0	25,0	19	19
		GE10L1/2BSPTB	GE10L1/2BSPT	10	1/2"	17,0	10,0	14,0	25,0	22	19
		GE12L1/8BSPTB	GE12L1/8BSPT	12	1/8"	-	-	8,0	24,0	19	22
		GE12L1/4BSPTB	GE12L1/4BSPT	12	1/4"	17,0	10,0	12,0	24,5	19	22
		GE12L3/8BSPTB	GE12L3/8BSPT	12	3/8"	17,0	10,0	12,0	24,5	19	22
		GE12L1/2BSPTB	GE12L1/2BSPT	12	1/2"	17,0	10,0	14,0	24,5	22	22
		GE12L3/4BSPTB	GE12L3/4BSPT	12	3/4"	-	-	16,0	26,0	27	22
		GE15L1/4BSPTB	GE15L1/4BSPT	15	1/4"	-	-	12,0	25,0	24	27
		GE15L3/8BSPTB	GE15L3/8BSPT	15	3/8"	18,0	11,0	12,0	26,0	24	27
		GE15L1/2BSPTB	GE15L1/2BSPT	15	1/2"	18,0	11,0	14,0	26,0	24	27
		GE15L3/4BSPTB	GE15L3/4BSPT	15	3/4"	-	-	16,0	-	27	27
		GE18L3/8BSPTB	GE18L3/8BSPT	18	3/8"	19,0	11,5	12,0	30,0	27	32
		GE18L1/2BSPTB	GE18L1/2BSPT	18	1/2"	19,0	11,5	14,0	28,0	27	32
		GE18L3/4BSPTB	GE18L3/4BSPT	18	3/4"	19,0	11,5	16,0	28,0	32	32
	160	GE22L3/8BSPTB	GE22L3/8BSPT	22	3/8"	21,0	13,5	12,0	34,0	32	36
		GE22L1/2BSPTB	GE22L1/2BSPT	22	1/2"	19,0	11,5	14,0	32,0	32	36
		GE22L3/4BSPTB	GE22L3/4BSPT	22	3/4"	21,0	13,5	16,0	30,0	32	36
		GE22L1BSPTB	GE22L1BSPT	22	1"	21,0	13,5	18,0	32,0	36	36
		GE28L1/2BSPTB	GE28L1/2BSPT	28	1/2"	-	-	14,0	-	41	41
		GE28L3/4BSPTB	GE28L3/4BSPT	28	3/4"	22,0	14,5	16,0	33,0	41	41
		GE28L1BSPTB	GE28L1BSPT	28	1"	22,0	14,5	18,0	31,0	41	41
		GE28L11/4BSPTB	GE28L11/4BSPT	28	1,1/4"	18,0	10,5	20,0	29,0	46	41
		GE35L1BSPTB	GE35L1BSPT	35	1"	20,0	9,5	18,0	33,0	46	50
		GE35L11/4BSPTB	GE35L11/4BSPT	35	1,1/4"	25,0	14,5	20,0	36,0	46	50
		GE35L11/2BSPTB	GE35L11/2BSPT	35	1,1/2"	-	-	22,0	-	50	50
		GE42L11/4BSPTB	GE42L11/4BSPT	42	1,1/4"	22,0	11,0	20,0	35,0	55	60
		GE42L11/2BSPTB	GE42L11/2BSPT	42	1,1/2"	27,0	16,0	22,0	39,0	55	60

ADATTATORE MASCHIO DI ESTREMITÀ - Serie S

Filetto Gas Conico

MALE STUD COUPLING - S Series

BSP Taper Thread

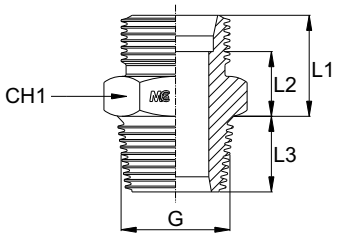

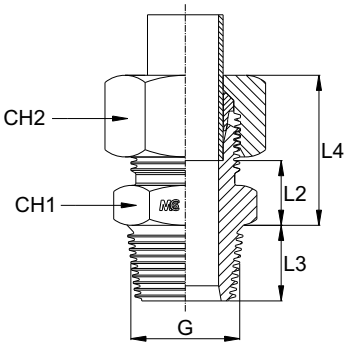

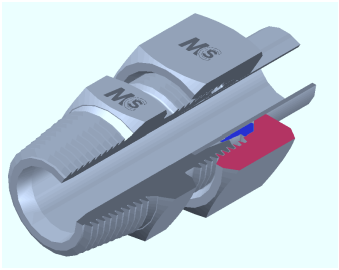

Serie Series	Bar W.P.	Codice (Corpo) Part Number (Body)	Codice (Completo) Part Number (Complete)	Ø Est. Tubo Tube O.D.	G	L1	L2	L3	L4	CH1	CH2
S	630	GE06S1/8BSPTB	GE06S1/8BSPT	6	1/8"	-	-	8,0	-	17	17
		GE06S1/4BSPTB	GE06S1/4BSPT	6	1/4"	18,0	11,0	12,0	26,0	17	17
		GE06S3/8BSPTB	GE06S3/8BSPT	6	3/8"	-	-	12,0	-	17	17
		GE08S1/8BSPTB	GE08S1/8BSPT	8	1/8"	-	-	8,0	-	17	19
		GE08S1/4BSPTB	GE08S1/4BSPT	8	1/4"	20,0	13,0	12,0	28,0	17	19
		GE08S3/8BSPTB	GE08S3/8BSPT	8	3/8"	20,0	13,0	12,0	28,0	19	19
		GE10S1/4BSPTB	GE10S1/4BSPT	10	1/4"	20,5	13,0	12,0	29,0	19	22
		GE10S3/8BSPTB	GE10S3/8BSPT	10	3/8"	20,0	12,5	12,0	28,5	19	22
		GE10S1/2BSPTB	GE10S1/2BSPT	10	1/2"	-	-	14,0	-	22	22
		GE12S1/4BSPTB	GE12S1/4BSPT	12	1/4"	22,0	14,5	12,0	31,0	22	24
		GE12S3/8BSPTB	GE12S3/8BSPT	12	3/8"	22,0	14,5	12,0	30,5	22	24
		GE12S1/2BSPTB	GE12S1/2BSPT	12	1/2"	22,0	14,5	14,0	30,5	22	24
		GE14S3/8BSPTB	GE14S3/8BSPT	14	3/8"	24,0	16,0	12,0	34,0	24	27
		GE14S1/2BSPTB	GE14S1/2BSPT	14	1/2"	24,0	16,0	14,0	34,0	24	27
	400	GE16S3/8BSPTB	GE16S3/8BSPT	16	3/8"	24,0	15,5	12,0	34,0	27	30
		GE16S1/2BSPTB	GE16S1/2BSPT	16	1/2"	24,0	15,5	14,0	34,0	27	30
		GE16S3/4BSPTB	GE16S3/4BSPT	16	3/4"	-	-	16,0	-	27	30
		GE20S1/2BSPTB	GE20S1/2BSPT	20	1/2"	28,0	17,5	14,0	39,0	32	36
		GE20S3/4BSPTB	GE20S3/4BSPT	20	3/4"	28,0	17,5	16,0	39,0	32	36
		GE20S1BSPTB	GE20S1BSPT	20	1"	-	-	18,0	-	36	36
		GE25S3/4BSPTB	GE25S3/4BSPT	25	3/4"	32,0	20,0	16,0	44,0	41	46
		GE25S1BSPTB	GE25S1BSPT	25	1"	32,0	20,0	18,0	44,0	41	46
		GE30S1BSPTB	GE30S1BSPT	30	1"	34,0	20,5	18,0	47,0	46	50
		GE30S11/4BSPTB	GE30S11/4BSPT	30	1,1/4"	34,0	20,5	20,0	47,0	46	50
	315	GE38S11/2BSPTB	GE38S11/2BSPT	38	1,1/2"	39,0	23,0	22,0	54,0	55	60

ADATTATORE MASCHIO DI ESTREMITÀ - Serie L

Filetto NPT

MALE STUD COUPLING - L Series

NPT Thread

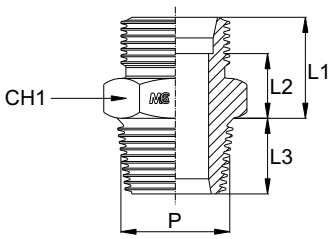

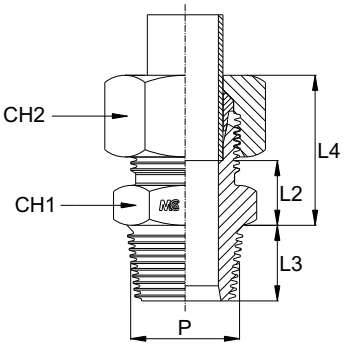

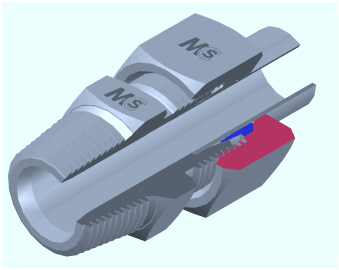

Serie Series	Bar W.P.	Codice (Corpo) Part Number (Body)	Codice (Completo) Part Number (Complete)	Ø Est. Tubo Tube O.D.	P	L1	L2	L3	L4	CH1	CH2
L	315	GE06L1/8NPTB	GE06L1/8NPT	6	1/8”	14,0	7,0	10,0	22,0	14	14
		GE06L1/4NPTB	GE06L1/4NPT	6	1/4”	15,0	8,0	15,0	22,5	14	14
		GE06L3/8NPTB	GE06L3/8NPT	6	3/8”	14,7	7,7	15,3	22,7	19	14
		GE06L1/2NPTB	GE06L1/2NPT	6	1/2”	16,0	9,0	20,0	24,0	22	14
		GE08L1/8NPTB	GE08L1/8NPT	8	1/8”	15,0	8,0	10,0	23,0	17	17
		GE08L1/4NPTB	GE08L1/4NPT	8	1/4”	15,0	8,0	15,0	23,0	17	17
		GE08L3/8NPTB	GE08L3/8NPT	8	3/8”	16,0	9,0	15,0	24,0	19	17
		GE08L1/2NPTB	GE08L1/2NPT	8	1/2”	16,5	9,5	19,5	24,5	22	17
		GE10L1/4NPTB	GE10L1/4NPT	10	1/4”	16,0	9,0	15,0	24,0	17	19
		GE10L3/8NPTB	GE10L3/8NPT	10	3/8”	17,0	10,0	15,0	25,0	19	19
		GE10L1/2NPTB	GE10L1/2NPT	10	1/2”	17,5	10,5	19,5	25,5	22	19
		GE10L3/4NPTB	GE10L3/4NPT	10	3/4”	18,0	11,0	20,0	26,0	27	19
		GE10L1/8NPTB	GE10L1/8NPT	10	1/8”	16,0	9,0	10,0	24,0	17	19
		GE12L1/8NPTB	GE12L1/8NPT	12	1/8”	16,0	9,0	10,0	24,0	19	22
		GE12L1/4NPTB	GE12L1/4NPT	12	1/4”	17,0	10,0	15,0	24,5	19	22
		GE12L3/8NPTB	GE12L3/8NPT	12	3/8”	17,0	10,0	15,0	24,5	19	22
		GE12L1/2NPTB	GE12L1/2NPT	12	1/2”	17,5	10,5	19,5	25,0	22	22
		GE12L3/4NPTB	GE12L3/4NPT	12	3/4”	18,0	11,0	20,0	28,0	27	22
		GE15L1/4NPTB	GE15L1/4NPT	15	1/4”	18,0	11,0	15,0	30,0	24	27
		GE15L3/8NPTB	GE15L3/8NPT	15	3/8”	18,0	11,0	15,0	26,0	24	27
		GE15L1/2NPTB	GE15L1/2NPT	15	1/2”	18,5	11,5	19,5	26,5	24	27
		GE15L3/4NPTB	GE15L3/4NPT	15	3/4”	19,0	12,0	20,0	27,0	27	27
		GE18L3/8NPTB	GE18L3/8NPT	18	3/8”	18,7	11,2	15,3	27,7	27	32
		GE18L1/2NPTB	GE18L1/2NPT	18	1/2”	19,5	12,0	19,5	28,5	27	32
		GE18L3/4NPTB	GE18L3/4NPT	18	3/4”	19,0	11,5	20,0	28,0	32	32
		GE18L1NPTB	GE18L1NPT	18	1”	20,0	12,5	25,0	29,0	36	32
	160	GE22L3/8NPTB	GE22L3/8NPT	22	3/8”	20,7	13,2	15,3	29,7	32	36
		GE22L1/2NPTB	GE22L1/2NPT	22	1/2”	21,0	13,5	20,0	30,0	32	36
		GE22L3/4NPTB	GE22L3/4NPT	22	3/4”	21,0	13,5	20,0	30,0	32	36
		GE22L1NPTB	GE22L1NPT	22	1”	22,0	14,5	25,0	31,0	36	36
		GE22L11/4NPTB	GE22L11/4NPT	22	1,1/4”	28,5	21,0	25,5	42,5	46	36
		GE28L1/2NPTB	GE28L1/2NPT	28	1/2”	22,5	15,0	20,0	36,0	41	41
		GE28L3/4NPTB	GE28L3/4NPT	28	3/4”	22,0	14,5	20,0	31,0	41	41
		GE28L1NPTB	GE28L1NPT	28	1”	22,0	14,5	25,0	31,0	41	41
		GE28L11/4NPTB	GE28L11/4NPT	28	1,1/4”	23,0	15,5	25,5	22,5	46	41
		GE35L3/4NPTB	GE35L3/4NPT	35	3/4”	-	-	20,0	-	46	50
		GE35L1NPTB	GE35L1NPT	35	1”	25,0	14,5	25,0	36,0	46	50
		GE35L11/4NPTB	GE35L11/4NPT	35	1,1/4”	25,5	15,0	25,5	36,5	46	50
		GE35L11/2NPTB	GE35L11/2NPT	35	1,1/2”	27,0	16,5	26,0	43,0	55	50
		GE42L1NPTB	GE42L1NPT	42	1”	26,5	15,5	25,0	42,0	55	60
		GE42L11/4NPTB	GE42L11/4NPT	42	1,1/4”	27,5	16,5	25,5	39,5	55	60
		GE42L11/2NPTB	GE42L11/2NPT	42	1,1/2”	27,0	16,0	26,0	39,0	55	60

ADATTATORE MASCHIO DI ESTREMITÀ - Serie S

Filetto NPT

MALE STUD COUPLING - S Series

NPT Thread

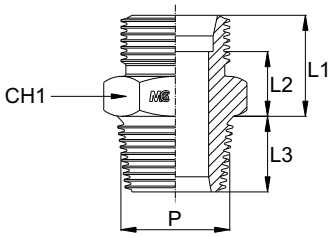

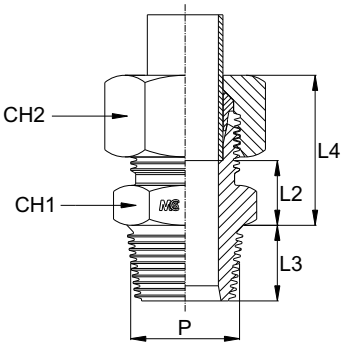

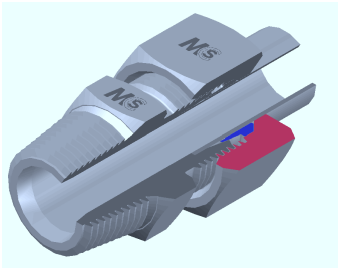

Serie Series	Bar W.P.	Codice (Corpo) Part Number (Body)	Codice (Completo) Part Number (Complete)	Ø Est. Tubo Tube O.D.	P	L1	L2	L3	L4	CH1	CH2
S	630	GE06S1/8NPTB	GE06S1/8NPT	6	1/8”	18,0	11,0	10,0	26,0	14	17
		GE06S1/4NPTB	GE06S1/4NPT	6	1/4”	18,0	11,0	15,0	26,0	17	17
		GE06S3/8NPTB	GE06S3/8NPT	6	3/8”	17,7	10,7	15,3	25,7	19	17
		GE06S1/2NPTB	GE06S1/2NPT	6	1/2”	22,0	15,0	20,0	30,0	22	17
		GE08S1/8NPTB	GE08S1/8NPT	8	1/8”	20,0	13,0	10,0	-	17	19
		GE08S1/4NPTB	GE08S1/4NPT	8	1/4”	20,0	13,0	15,0	28,0	17	19
		GE08S3/8NPTB	GE08S3/8NPT	8	3/8”	19,7	12,7	15,3	27,7	19	19
		GE08S1/2NPTB	GE08S1/2NPT	8	1/2”	22,0	15,0	20,0	30,0	22	19
		GE10S1/8NPTB	GE10S1/8NPT	10	1/8”	-	-	10,0	-	19	22
		GE10S1/4NPTB	GE10S1/4NPT	10	1/4”	20,0	12,5	15,0	29,0	19	22
		GE10S3/8NPTB	GE10S3/8NPT	10	3/8”	20,0	12,5	15,0	28,5	19	22
		GE10S1/2NPTB	GE10S1/2NPT	10	1/2”	22,0	14,5	20,0	31,0	22	22
		GE10S3/4NPTB	GE10S3/4NPT	10	3/4”	24,0	16,5	20,0	33,0	27	22
		GE12S1/4NPTB	GE12S1/4NPT	12	1/4”	22,0	14,5	15,0	31,0	22	24
		GE12S3/8NPTB	GE12S3/8NPT	12	3/8”	22,0	14,5	15,0	30,5	22	24
		GE12S1/2NPTB	GE12S1/2NPT	12	1/2”	22,5	15,0	19,5	31,0	22	24
		GE12S3/4NPTB	GE12S3/4NPT	12	3/4”	24,0	16,5	20,0	33,0	27	24
		GE14S3/8NPTB	GE14S3/8NPT	14	3/8”	24,0	16,0	15,0	34,0	24	27
		GE14S1/2NPTB	GE14S1/2NPT	14	1/2”	24,5	16,5	19,5	34,5	24	27
		GE14S3/4NPTB	GE14S3/4NPT	14	3/4”	26,0	18,0	20,0	36,0	27	27
	400	GE16S3/8NPTB	GE16S3/8NPT	16	3/8”	24,0	15,5	15,0	34,0	27	30
		GE16S1/2NPTB	GE16S1/2NPT	16	1/2”	24,5	16,0	19,5	34,5	27	30
		GE16S3/4NPTB	GE16S3/4NPT	16	3/4”	26,0	17,5	20,0	36,0	30	30
		GE16S1NPTB	GE16S1NPT	16	1”	28,0	19,5	25,0	38,0	36	30
		GE20S3/8NPTB	GE20S3/8NPT	20	3/8”	27,7	17,2	15,3	-	32	36
		GE20S1/2NPTB	GE20S1/2NPT	20	1/2”	28,5	18,0	19,5	39,5	32	36
		GE20S3/4NPTB	GE20S3/4NPT	20	3/4”	28,0	17,5	20,0	39,0	32	36
		GE20S1NPTB	GE20S1NPT	20	1”	28,0	17,5	25,0	39,0	36	36
		GE20S11/4NPTB	GE20S11/4NPT	20	1,1/4”	-	-	25,5	-	46	36
		GE25S1/2NPTB	GE25S1/2NPT	25	1/2”	-	-	20,0	-	41	46
		GE25S3/4NPTB	GE25S3/4NPT	25	3/4”	32,0	20,0	20,0	44,0	41	46
		GE25S1NPTB	GE25S1NPT	25	1”	32,0	20,0	25,0	44,0	41	46
		GE25S11/4NPTB	GE25S11/4NPT	25	1,1/4”	32,5	20,5	25,5	44,5	46	46
		GE30S3/4NPTB	GE30S3/4NPT	30	3/4”	34,0	20,5	20,0	47,0	46	50
		GE30S1NPTB	GE30S1NPT	30	1”	34,0	20,5	25,0	47,0	46	50
		GE30S11/4NPTB	GE30S11/4NPT	30	1,1/4”	34,5	21,0	25,5	47,5	46	50
		GE30S11/2NPTB	GE30S11/2NPT	30	1,1/2”	34,0	20,5	26,0	47,0	55	50
	315	GE38S1NPTB	GE38S1NPT	38	1”	39,0	23,0	25,0	54,0	55	60
		GE38S11/4NPTB	GE38S11/4NPT	38	1,1/4”	39,5	23,5	25,5	54,5	55	60
		GE38S11/2NPTB	GE38S11/2NPT	38	1,1/2”	39,0	23,0	26,0	54,0	55	60

DIRITTO DI ESTREMITÀ
Filetto Metrico Conico

MALE STUD COUPLING
Metric Taper Thread

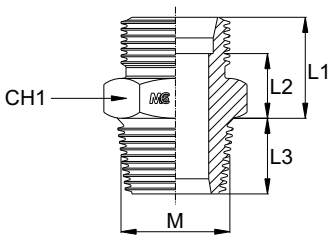

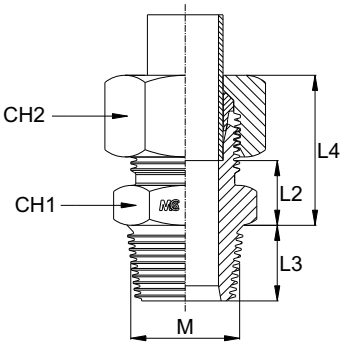

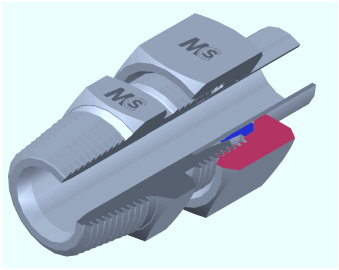

Serie Series	Bar W.P.	Codice (Corpo) Part Number (Body)	Codice (Completo) Part Number (Complete)	Ø Est. Tubo Tube O.D.	M	L1	L2	L3	L4	CH1	CH2
L	315	GE06LM101KB	GE06LM101K	6	10x1,0	14,0	7,0	8,0	22,0	14	14
		GE08LM1215KB	GE08LM1215K	8	12x1,5	15,0	8,0	12,0	23,0	17	17
		GE10LM1415KB	GE10LM1415K	10	14x1,5	16,0	9,0	12,0	24,0	17	19
		GE12LM1615KB	GE12LM1615K	12	16x1,5	17,0	10,0	12,0	24,5	19	22
		GE15LM1815KB	GE15LM1815K	15	18x1,5	18,0	11,0	12,0	26,0	24	27
		GE18LM2215KB	GE18LM2215K	18	22x1,5	19,0	11,5	14,0	28,0	27	32
S	630	GE06SM1215KB	GE06SM1215K	6	12x1,5	18,0	11,0	12,0	26,0	17	17
		GE08SM1415KB	GE08SM1415K	8	14x1,5	20,0	13,0	12,0	28,0	17	19
		GE10SM1615KB	GE10SM1615K	10	16x1,5	20,0	12,5	12,0	28,5	19	22
		GE12SM1815KB	GE12SM1815K	12	18x1,5	22,0	14,5	12,0	30,5	22	24
		GE14SM2015KB	GE14SM2015K	14	20x1,5	24,0	16,0	14,0	34,0	24	27
	400	GE16SM2215KB	GE16SM2215K	16	22x1,5	24,0	15,5	14,0	34,0	27	30

ADATTATORE MASCHIO DI ESTREMITÀ A GOMITO - Serie L

Filetto Gas Conico

MALE STUD ELBOW - L Series

BSP Taper Thread

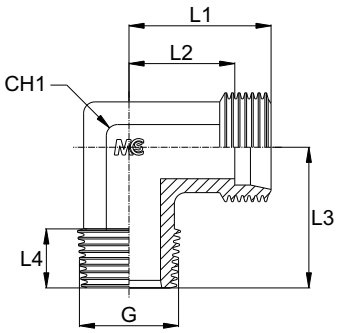

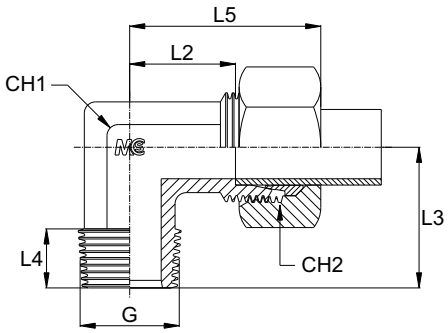

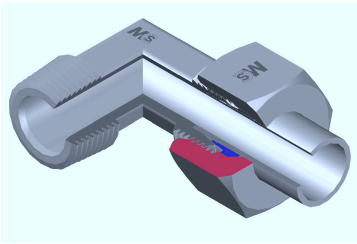

Serie Series	Bar W.P.	Codice (Corpo) Part Number (Body)	Codice (Completo) Part Number (Complete)	Ø Est. Tubo Tube O.D.	G	L1	L2	L3	L4	L5	CH1	CH2
L	315	LE06L1/8BSPTB	LE06L1/8BSPT	6	1/8”	19,0	12,0	20,0	8,0	27,0	12	14
		LE06L1/4BSPTB	LE06L1/4BSPT	6	1/4”	21,0	14,0	26,0	12,0	29,0	12	14
		LE06L3/8BSPTB	LE06L3/8BSPT	6	3/8”	22,0	15,0	27,0	12,0	30,0	14	14
		LE06L1/2BSPTB	LE06L1/2BSPT	6	1/2”	22,5	15,5	30,0	14,0	30,5	17	14
		LE08L1/8BSPTB	LE08L1/8BSPT	8	1/8”	21,0	14,0	22,0	8,0	29,0	12	17
		LE08L1/4BSPTB	LE08L1/4BSPT	8	1/4”	21,0	14,0	26,0	12,0	29,0	12	17
		LE08L3/8BSPTB	LE08L3/8BSPT	8	3/8”	23,0	16,0	28,0	12,0	31,0	17	17
		LE08L1/2BSPTB	LE08L1/2BSPT	8	1/2”	26,0	19,0	34,0	14,0	34,0	19	17
		LE10L1/8BSPTB	LE10L1/8BSPT	10	1/8”	22,0	15,0	22,0	8,0	30,0	14	19
		LE10L1/4BSPTB	LE10L1/4BSPT	10	1/4”	22,0	15,0	27,0	12,0	30,0	14	19
		LE10L3/8BSPTB	LE10L3/8BSPT	10	3/8”	24,0	17,0	28,0	12,0	32,0	17	19
		LE10L1/2BSPTB	LE10L1/2BSPT	10	1/2”	27,0	20,0	34,0	14,0	35,0	19	19
		LE12L1/8BSPTB	LE12L1/8BSPT	12	1/8”	24,5	17,5	27,0	8,0	32,0	17	22
		LE12L1/4BSPTB	LE12L1/4BSPT	12	1/4”	24,0	17,0	28,0	12,0	32,0	17	22
		LE12L3/8BSPTB	LE12L3/8BSPT	12	3/8”	24,0	17,0	28,0	12,0	32,0	17	22
		LE12L1/2BSPTB	LE12L1/2BSPT	12	1/2”	27,0	20,0	34,0	14,0	34,0	19	22
		LE15L1/4BSPTB	LE15L1/4BSPT	15	1/4”	28,0	21,0	32,0	12,0	36,0	19	27
		LE15L3/8BSPTB	LE15L3/8BSPT	15	3/8”	28,0	21,0	30,0	12,0	36,0	19	27
		LE15L1/2BSPTB	LE15L1/2BSPT	15	1/2”	28,0	21,0	34,0	14,0	36,0	19	27
		LE15L3/4BSPTB	LE15L3/4BSPT	15	3/4”	-	-	-	16,0	-	27	27
		LE18L3/8BSPTB	LE18L3/8BSPT	18	3/8”	31,0	23,5	-	12,0	40,0	24	32
		LE18L1/2BSPTB	LE18L1/2BSPT	18	1/2”	31,0	23,5	36,0	14,0	40,0	24	32
		LE18L3/4BSPTB	LE18L3/4BSPT	18	3/4”	34,0	26,5	42,0	16,0	43,0	27	32
	160	LE22L1/2BSPTB	LE22L1/2BSPT	22	1/2”	35,0	27,5	41,0	14,0	44,0	27	36
		LE22L3/4BSPTB	LE22L3/4BSPT	22	3/4”	35,0	27,5	42,0	16,0	44,0	27	36
		LE28L1BSPTB	LE28L1BSPT	28	1”	38,0	30,5	48,0	18,0	47,0	36	41
		LE35L11/4BSPTB	LE35L11/4BSPT	35	1,1/4”	45,0	34,5	54,0	20,0	56,0	41	50
		LE42L11/2BSPTB	LE42L11/2BSPT	42	1,1/2”	51,0	40,0	61,0	22,0	63,0	50	60

ADATTATORE MASCHIO DI ESTREMITÀ A GOMITO - Serie S

Filetto Gas Conico

MALE STUD ELBOW - S Series

BSP Taper Thread

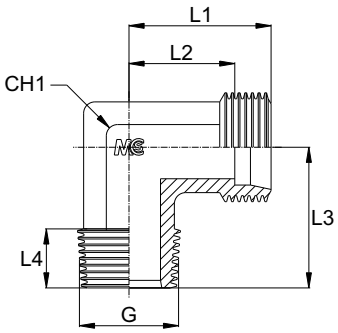

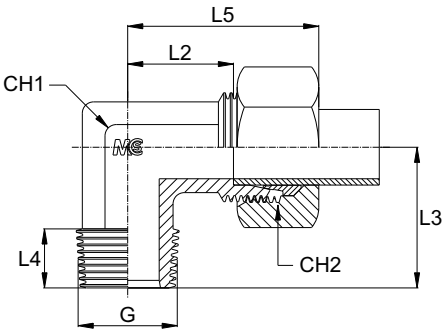

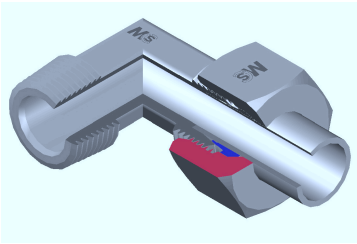

Serie Series	Bar W.P.	Codice (Corpo) Part Number (Body)	Codice (Completo) Part Number (Complete)	Ø Est. Tubo Tube O.D.	G	L1	L2	L3	L4	L5	CH1	CH2
S	630	LE06S1/8BSPTB	LE06S1/8BSPT	6	1/8”	22,0	15,0	25,0	8,0	29,5	12	17
		LE06S1/4BSPTB	LE06S1/4BSPT	6	1/4”	23,0	16,0	26,0	12,0	31,0	12	17
		LE06S3/8BSPTB	LE06S3/8BSPT	6	3/8”	23,5	16,5	26,0	12,0	31,0	14	17
		LE06S1/2BSPTB	LE06S1/2BSPT	6	1/2”	26,0	19,0	33,0	14,0	34,0	17	17
		LE08S1/8BSPTB	LE08S1/8BSPT	8	1/8”	-	-	-	8,0	-	14	19
		LE08S1/4BSPTB	LE08S1/4BSPT	8	1/4”	24,0	17,0	27,0	12,0	32,0	14	19
		LE08S3/8BSPTB	LE08S3/8BSPT	8	3/8”	25,0	18,0	28,0	12,0	33,0	14	19
		LE08S1/2BSPTB	LE08S1/2BSPT	8	1/2”	30,0	23,0	33,0	14,0	38,0	17	19
		LE10S1/8BSPTB	LE10S1/8BSPT	10	1/8”	-	-	-	8,0	-	17	22
		LE10S1/4BSPTB	LE10S1/4BSPT	10	1/4”	25,0	17,5	28,0	12,0	34,0	17	22
		LE10S3/8BSPTB	LE10S3/8BSPT	10	3/8”	25,0	17,5	28,0	12,0	34,0	17	22
		LE10S1/2BSPTB	LE10S1/2BSPT	10	1/2”	30,0	22,5	34,0	14,0	39,0	19	22
		LE12S1/4BSPTB	LE12S1/4BSPT	12	1/4”	29,0	21,5	27,0	12,0	38,0	17	24
		LE12S3/8BSPTB	LE12S3/8BSPT	12	3/8”	29,0	21,5	28,0	12,0	38,0	17	24
		LE12S1/2BSPTB	LE12S1/2BSPT	12	1/2”	28,0	20,5	32,0	14,0	37,0	19	24
		LE14S3/8BSPTB	LE14S3/8BSPT	14	3/8”	30,0	22,0	30,0	12,0	40,0	19	27
		LE14S1/2BSPTB	LE14S1/2BSPT	14	1/2”	30,0	22,0	32,0	14,0	40,0	19	27
	400	LE16S3/8BSPTB	LE16S3/8BSPT	16	3/8”	33,0	24,5	37,0	12,0	43,0	24	30
		LE16S1/2BSPTB	LE16S1/2BSPT	16	1/2”	33,0	24,5	32,0	14,0	43,0	24	30
		LE16S3/4BSPTB	LE16S3/4BSPT	16	3/4”	33,0	24,5	41,0	16,0	43,0	27	30
		LE20S1/2BSPTB	LE20S1/2BSPT	20	1/2”	37,0	26,5	36,0	14,0	48,0	27	36
		LE20S3/4BSPTB	LE20S3/4BSPT	20	3/4”	37,0	26,5	42,0	16,0	48,0	27	36
		LE25S3/4BSPTB	LE25S3/4BSPT	25	3/4”	42,0	30,0	42,0	16,0	54,0	36	46
		LE25S1BSPTB	LE25S1BSPT	25	1”	42,0	30,0	48,0	18,0	54,0	36	46
		LE30S1BSPTB	LE30S1BSPT	30	1”	49,0	35,5	48,0	18,0	62,0	41	50
		LE30S11/4BSPTB	LE30S11/4BSPT	30	1,1/4”	49,0	35,5	54,0	20,0	62,0	41	50
	315	LE38S11/2BSPTB	LE38S11/2BSPT	38	1,1/2”	57,0	41,0	61,0	22,0	72,0	50	60

ADATTATORE MASCHIO DI ESTREMITÀ A GOMITO - Serie L

Filetto NPT

MALE STUD ELBOW - L Series

NPT Thread

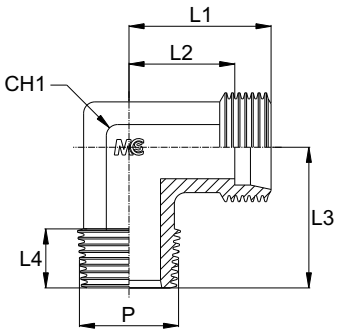

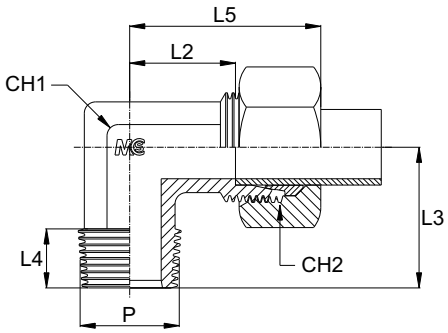

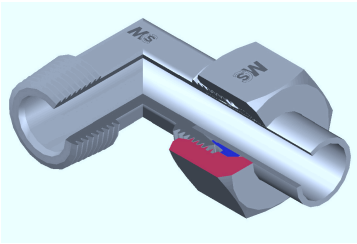

Serie Series	Bar W.P.	Codice (Corpo) Part Number (Body)	Codice (Completo) Part Number (Complete)	Ø Est. Tubo Tube O.D.	p	L1	L2	L3	L4	L5	CH1	CH2
L	315	LE06L1/8NPTB	LE06L1/8NPT	6	1/8"	19,0	12,0	20,0	10,0	27,0	12	14
		LE06L1/4NPTB	LE06L1/4NPT	6	1/4"	21,0	14,0	26,0	15,0	29,0	12	14
		LE06L3/8NPTB	LE06L3/8NPT	6	3/8"	25,0	18,0	28,0	15,3	33,0	14	-
		LE06L1/2NPTB	LE06L1/2NPT	6	1/2"	22,5	15,5	30,0	20,0	30,5	17	14
		LE08L1/8NPTB	LE08L1/8NPT	8	1/8"	21,0	14,0	24,0	10,0	29,0	12	17
		LE08L1/4NPTB	LE08L1/4NPT	8	1/4"	21,0	14,0	26,0	15,0	29,0	12	17
		LE08L3/8NPTB	LE08L3/8NPT	8	3/8"	23,0	16,0	28,0	15,0	31,0	17	17
		LE08L1/2NPTB	LE08L1/2NPT	8	1/2"	26,0	19,0	34,0	19,5	34,0	19	17
		LE10L1/8NPTB	LE10L1/8NPT	10	1/8"	22,0	15,0	24,0	10,0	30,0	14	19
		LE10L1/4NPTB	LE10L1/4NPT	10	1/4"	22,0	15,0	27,0	15,0	30,0	14	19
		LE10L3/8NPTB	LE10L3/8NPT	10	3/8"	24,0	17,0	28,0	15,0	32,0	17	19
		LE10L1/2NPTB	LE10L1/2NPT	10	1/2"	27,0	20,0	34,0	19,5	35,0	19	19
		LE12L1/4NPTB	LE12L1/4NPT	12	1/4"	24,0	17,0	28,0	15,0	32,0	17	22
		LE12L3/8NPTB	LE12L3/8NPT	12	3/8"	24,0	17,0	28,0	15,0	32,0	17	22
		LE12L1/2NPTB	LE12L1/2NPT	12	1/2"	27,0	20,0	34,0	19,5	35,0	19	22
		LE15L3/8NPTB	LE15L3/8NPT	15	3/8"	28,0	21,0	33,0	15,0	36,0	19	27
		LE15L1/2NPTB	LE15L1/2NPT	15	1/2"	28,0	21,0	34,0	19,5	36,0	19	27
		LE15L3/4NPTB	LE15L3/4NPT	15	3/4"	28,0	21,0	42,0	20,0	36,0	24	27
		LE18L3/8NPTB	LE18L3/8NPT	18	3/8"	31,0	23,5	36,0	15,3	40,0	24	32
		LE18L1/2NPTB	LE18L1/2NPT	18	1/2"	31,0	23,5	36,0	19,5	40,0	24	32
		LE18L3/4NPTB	LE18L3/4NPT	18	3/4"	34,0	26,5	42,0	20,0	43,0	27	32
	160	LE22L1/2NPTB	LE22L1/2NPT	22	1/2"	35,0	27,5	42,0	20,0	44,0	27	36
		LE22L3/4NPTB	LE22L3/4NPT	22	3/4"	35,0	27,5	42,0	20,0	44,0	27	36
		LE28L3/4NPTB	LE28L3/4NPT	28	3/4"	38,0	30,5	48,0	20,0	47,0	36	41
		LE 28L1NPTB	LE 28L1NPT	28	1"	38,0	30,5	48,0	25,0	47,0	36	41
		LE35L11/4NPTB	LE35L11/4NPT	35	1,1/4"	45,0	34,5	57,0	25,5	56,0	41	50
		LE42L11/2NPTB	LE42L11/2NPT	42	1,1/2"	51,0	40,0	61,0	26,0	63,0	50	60

ADATTATORE MASCHIO DI ESTREMITÀ A GOMITO - Serie S

Filetto NPT

MALE STUD ELBOW - S Series

NPT Thread

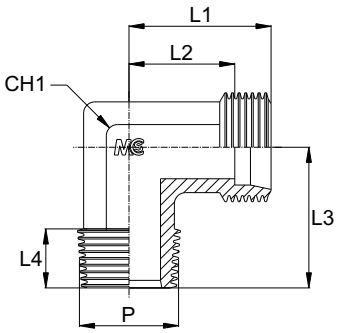

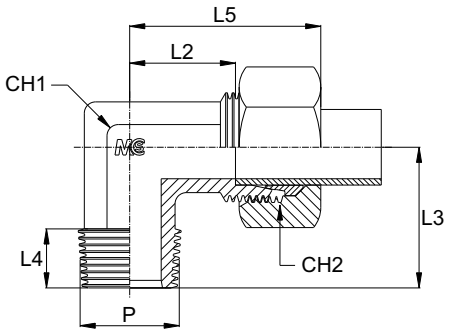

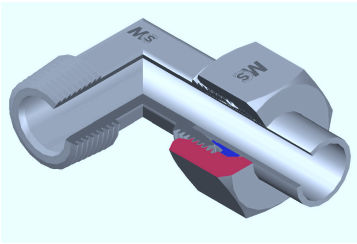

Serie Series	Bar W.P.	Codice (Corpo) Part Number (Body)	Codice (Completo) Part Number (Complete)	Ø Est. Tubo Tube O.D.	p	L1	L2	L3	L4	L5	CH1	CH2
S	630	LE06S1/4NPTB	LE06S1/4NPT	6	1/4"	23,0	16,0	26,0	15,0	31,0	12	17
		LE06S3/8NPTB	LE06S3/8NPT	6	3/8"	24,5	17,5	27,0	15,3	32,0	14	17
		LE06S1/2NPTB	LE06S1/2NPT	6	1/2"	28,0	21,0	34,0	20,0	36,0	17	17
		LE08S1/4NPTB	LE08S1/4NPT	8	1/4"	24,0	17,0	27,0	15,0	32,0	14	19
		LE08S3/8NPTB	LE08S3/8NPT	8	3/8"	25,0	18,0	28,0	15,3	33,0	14	19
		LE08S1/2NPTB	LE08S1/2NPT	8	1/2"	30,0	23,0	34,0	20,0	38,0	17	19
		LE10S1/4NPTB	LE10S1/4NPT	10	1/4"	25,0	17,5	28,0	15,0	34,0	17	22
		LE10S3/8NPTB	LE10S3/8NPT	10	3/8"	25,0	17,5	28,0	15,0	34,0	17	22
		LE10S1/2NPTB	LE10S1/2NPT	10	1/2"	30,0	22,5	32,0	20,0	39,0	19	22
		LE12S1/4NPTB	LE12S1/4NPT	12	1/4"	29,0	21,5	29,0	15,0	38,0	17	24
		LE12S3/8NPTB	LE12S3/8NPT	12	3/8"	29,0	21,5	28,0	15,0	38,0	17	24
		LE12S1/2NPTB	LE12S1/2NPT	12	1/2"	28,0	20,5	34,0	19,5	37,0	19	24
		LE14S3/8NPTB	LE14S3/8NPT	14	3/8"	30,0	22,0	33,0	15,0	40,0	19	27
		LE14S1/2NPTB	LE14S1/2NPT	14	1/2"	30,0	22,0	34,0	19,5	40,0	19	27
	400	LE16S3/8NPTB	LE16S3/8NPT	16	3/8"	33,0	24,5	37,0	15,0	43,0	24	30
		LE16S1/2NPTB	LE16S1/2NPT	16	1/2"	33,0	24,5	36,0	19,5	43,0	24	30
		LE16S3/4NPTB	LE16S3/4NPT	16	3/4"	33,0	24,5	41,0	20,0	43,0	27	30
		LE20S1/2NPTB	LE20S1/2NPT	20	1/2"	37,0	26,5	42,0	19,5	48,0	27	36
		LE20S3/4NPTB	LE20S3/4NPT	20	3/4"	37,0	26,5	42,0	20,0	48,0	27	36
		LE25S3/4NPTB	LE25S3/4NPT	25	3/4"	42,0	30,0	46,0	20,0	54,0	36	46
		LE25S1NPTB	LE25S1NPT	25	1"	42,0	30,0	48,0	25,0	54,0	36	46
		LE30S1NPTB	LE30S1NPT	30	1"	49,0	35,5	55,0	25,0	62,0	41	50
		LE30S11/4NPTB	LE30S11/4NPT	30	1,1/4"	49,0	35,5	57,0	25,5	62,0	41	50
	315	LE38S11/2NPTB	LE38S11/2NPT	38	1,1/2"	57,0	41,0	61,0	26,0	72,0	50	60

ADATTATORE MASCHIO DI ESTREMITÀ A GOMITO
Filetto Metrico Conico

MALE STUD ELBOW
Metric Taper Thread

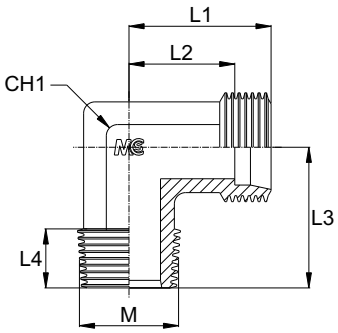

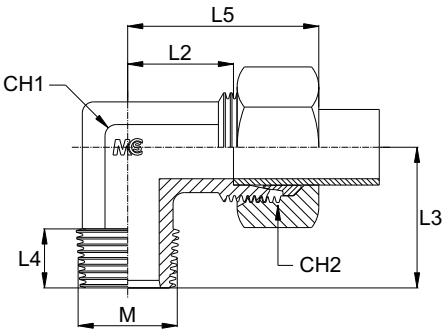

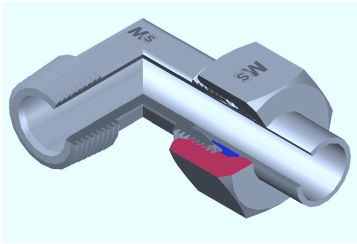

Serie Series	Bar W.P.	Codice (Corpo) Part Number (Body)	Codice (Completo) Part Number (Complete)	Ø Est. Tubo Tube O.D.	M	L1	L2	L3	L4	L5	CH1	CH2
L	315	LE06LM101B	LE06LM101	6	10x1,0	19,0	12,0	20,0	8,0	27,0	12	14
		LE08LM1215B	LE08LM1215	8	12x1,5	21,0	14,0	26,0	12,0	29,0	12	17
		LE10LM1215B	LE10LM1215	10	12x1,5	22,0	15,0	27,0	12,0	30,0	14	19
		LE10LM1415B	LE10LM1415	10	14x1,5	22,0	15,0	27,0	12,0	30,0	14	19
		LE12LM1615B	LE12LM1615	12	16x1,5	24,0	17,0	28,0	12,0	32,0	17	22
		LE15LM1815B	LE15LM1815	15	18x1,5	28,0	21,0	32,0	12,0	36,0	19	27
		LE18LM2215B	LE18LM2215	18	22x1,5	31,0	23,5	36,0	14,0	40,0	24	32
S	630	LE06SM1215B	LE06SM1215	6	12x1,5	23,0	16,0	26,0	12,0	31,0	12	17
		LE08SM1415B	LE08SM1415	8	14x1,5	24,0	17,0	27,0	12,0	32,0	14	19
		LE10SM1615B	LE10SM1615	10	16x1,5	25,0	17,5	28,0	12,0	34,0	17	22
		LE12SM1815B	LE12SM1815	12	18x1,5	29,0	21,5	28,0	12,0	38,0	17	24
		LE14SM2015B	LE14SM2015	14	20x1,5	30,0	22,0	32,0	14,0	40,0	19	27
	400	LE16SM2215B	LE16SM2215	16	22x1,5	33,0	24,5	32,0	14,0	43,0	24	30

ADATTATORE MASCHIO DI ESTREMITÀ A GOMITO
Filetto Gas Cilindrico

MALE STUD ELBOW
BSP Parallel Thread

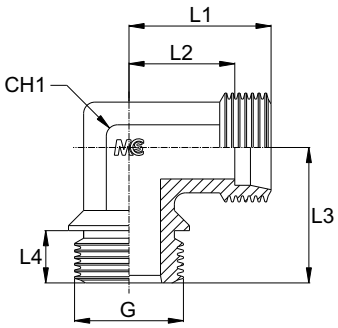

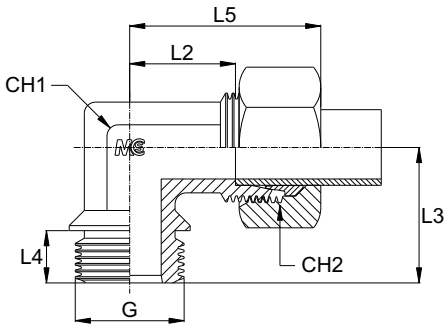

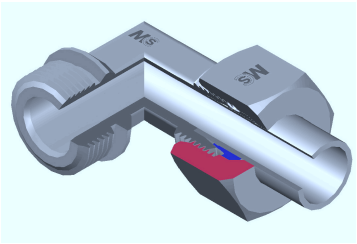

Serie Series	Bar W.P.	Codice (Corpo) Part Number (Body)	Codice (Completo) Part Number (Complete)	Ø Est. Tubo Tube O.D.	G	L1	L2	L3	L4	L5	CH1	CH2
L	160	LE22LRG3/4B	LE22LRG3/4	22	3/4"	35,0	27,5	43,5	15,0	44,0	27	36
		LE28LRG1B	LE28LRG1	28	1"	38,0	30,5	49,0	17,0	47,0	36	41
		LE35LRG11/4B	LE35LRG11/4	35	1,1/4"	45,0	34,5	57,0	19,0	56,0	41	50
		LE42LRG11/2B	LE42LRG11/2	42	1,1/2"	51,0	40,0	64,0	20,0	63,0	50	60
S	400	LE20SRG3/4B	LE20SRG3/4	20	3/4"	37,0	26,5	43,5	15,0	48,0	27	36
		LE25SRG1B	LE25SRG1	25	1"	42,0	30,0	49,0	17,0	54,0	36	46
		LE30SRG11/4B	LE30SRG11/4	30	1,1/4"	49,0	35,5	57,0	19,0	62,0	41	50
	315	LE38SRG11/2B	LE38SRG11/2	38	1,1/2"	57,0	41,0	64,0	20,0	72,0	50	60

ADATTATORE MASCHIO DI ESTREMITÀ A GOMITO
Filetto Metrico Cilindrico

MALE STUD ELBOW
Metric Parallel Thread

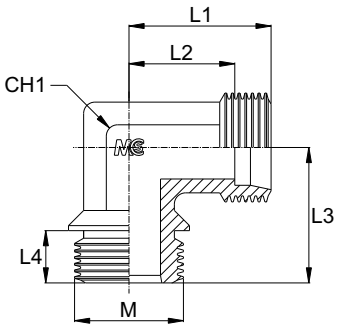

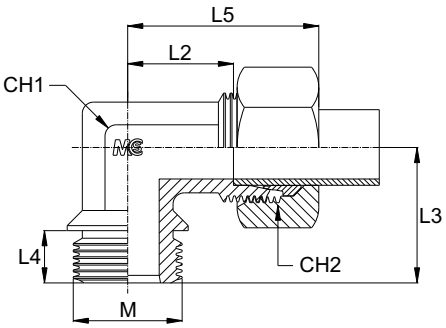

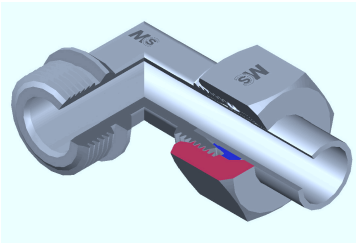

Serie Series	Bar W.P.	Codice (Corpo) Part Number (Body)	Codice (Completo) Part Number (Complete)	Ø Est. Tubo Tube O.D.	M	L1	L2	L3	L4	L5	CH1	CH2
L	160	LE22LM2615B	LE22LM2615	22	26x1,5	35,0	27,5	43,5	15,0	44,0	27	36
		LE28LM332B	LE28LM332	28	33x2,0	38,0	30,5	49,0	17,0	47,0	36	41
		LE35LM422B	LE35LM422	35	42x2,0	45,0	34,5	57,0	19,0	56,0	41	50
		LE42LM482B	LE42LM482	42	48x2,0	51,0	40,0	64,0	20,0	63,0	50	60
S	400	LE20SM272B	LE20SM272	20	27x2,0	37,0	26,5	43,5	15,0	48,0	27	36
		LE25SM332B	LE25SM332	25	33x2,0	42,0	30,0	49,0	17,0	54,0	36	46
		LE30SM422B	LE30SM422	30	42x2,0	49,0	35,5	57,0	19,0	62,0	41	50
	315	LE38SM482B	LE38SM482	38	48x2,0	57,0	41,0	64,0	20,0	72,0	50	60

ADATTATORE MASCHIO DI ESTREMITÀ A T CENTRALE
Filetto Gas Conico

MALE STUD BRANCH TEE
BSP Taper Thread

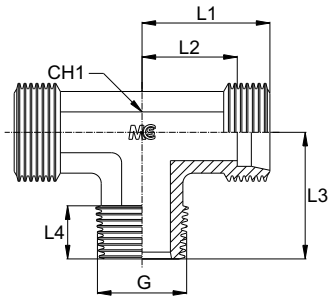

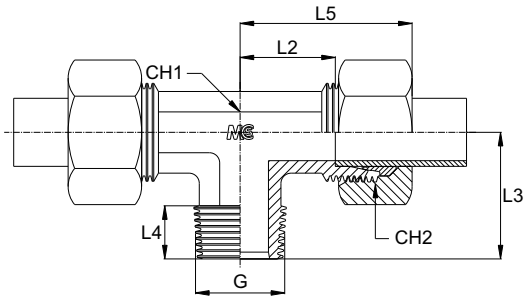

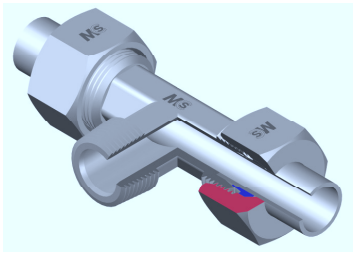

Serie Series	Bar W.P.	Codice (Corpo) Part Number (Body)	Codice (Completo) Part Number (Complete)	Ø Est. Tubo Tube O.D.	G	L1	L2	L3	L4	L5	CH1	CH2
L	315	TC06L1/8BSPTB	TC06L1/8BSPT	6	1/8”	19,0	12,0	20,0	8,0	27,0	12	14
		TC08L1/4BSPTB	TC08L1/4BSPT	8	1/4”	21,0	14,0	26,0	12,0	29,0	12	17
		TC10L1/4BSPTB	TC10L1/4BSPT	10	1/4”	22,0	15,0	27,0	12,0	30,0	14	19
		TC12L3/8BSPTB	TC12L3/8BSPT	12	3/8”	24,0	17,0	28,0	12,0	32,0	17	22
		TC15L1/2BSPTB	TC15L1/2BSPT	15	1/2”	28,0	21,0	34,0	14,0	36,0	19	27
		TC18L1/2BSPTB	TC18L1/2BSPT	18	1/2”	31,0	23,5	36,0	14,0	40,0	24	32
	160	TC22L3/4BSPTB	TC22L3/4BSPT	22	3/4”	35,0	27,5	42,0	16,0	44,0	27	36
		TC28L1BSPTB	TC28L1BSPT	28	1”	38,0	30,5	48,0	18,0	47,0	36	41
		TC35L11/4BSPTB	TC35L11/4BSPT	35	1,1/4”	45,0	34,5	54,0	20,0	56,0	41	50
		TC42L11/2BSPTB	TC42L11/2BSPT	42	1,1/2”	51,0	40,0	61,0	22,0	63,0	50	60
S	630	TC06S1/4BSPTB	TC06S1/4BSPT	6	1/4”	23,0	16,0	26,0	12,0	31,0	12	17
		TC08S1/4BSPTB	TC08S1/4BSPT	8	1/4”	24,0	17,0	27,0	12,0	32,0	14	19
		TC10S3/8BSPTB	TC10S3/8BSPT	10	3/8”	25,0	17,5	28,0	12,0	34,0	17	22
		TC12S3/8BSPTB	TC12S3/8BSPT	12	3/8”	29,0	21,5	28,0	12,0	38,0	17	24
		TC14S1/2BSPTB	TC14S1/2BSPT	14	1/2”	30,0	22,0	32,0	14,0	40,0	19	27
	400	TC16S1/2BSPTB	TC16S1/2BSPT	16	1/2”	33,0	24,5	32,0	14,0	43,0	24	30
		TC20S3/4BSPTB	TC20S3/4BSPT	20	3/4”	37,0	26,5	42,0	16,0	48,0	27	36
		TC25S1BSPTB	TC25S1BSPT	25	1”	42,0	30,0	48,0	18,0	54,0	36	46
		TC30S11/4BSPTB	TC30S11/4BSPT	30	1,1/4”	49,0	35,5	54,0	20,0	62,0	41	50
	315	TC38S11/2BSPTB	TC38S11/2BSPT	38	1,1/2”	57,0	41,0	61,0	22,0	72,0	50	60

ADATTATORE MASCHIO DI ESTREMITÀ A T CENTRALE
Filetto NPT

MALE STUD BRANCH TEE
NPT Thread

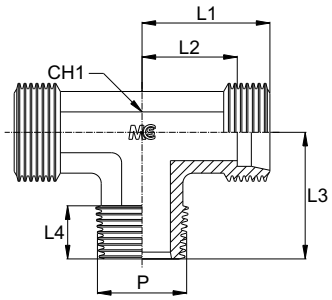

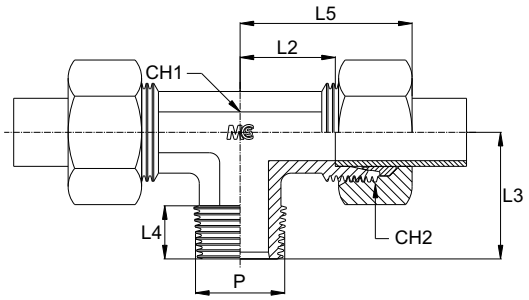

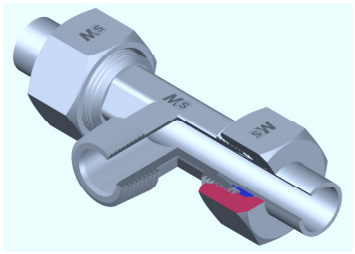

Serie Series	Bar W.P.	Codice (Corpo) Part Number (Body)	Codice (Completo) Part Number (Complete)	Ø Est. Tubo Tube O.D.	P	L1	L2	L3	L4	L5	CH1	CH2
L	315	TC06L1/8NPTB	TC06L1/8NPT	6	1/8”	19,0	12,0	20,0	10,0	27,0	12	14
		TC08L1/4NPTB	TC08L1/4NPT	8	1/4”	21,0	14,0	26,0	15,0	29,0	12	17
		TC10L1/4NPTB	TC10L1/4NPT	10	1/4”	22,0	15,0	27,0	15,0	30,0	14	19
		TC12L3/8NPTB	TC12L3/8NPT	12	3/8”	24,0	17,0	28,0	15,0	32,0	17	22
		TC15L1/2NPTB	TC15L1/2NPT	15	1/2”	28,0	21,0	34,0	19,5	36,0	19	27
		TC18L1/2NPTB	TC18L1/2NPT	18	1/2”	31,0	23,5	36,0	19,5	40,0	24	32
	160	TC22L3/4NPTB	TC22L3/4NPT	22	3/4”	35,0	27,5	42,0	20,0	44,0	27	36
		TC28L1NPTB	TC28L1NPT	28	1”	38,0	30,5	48,0	25,0	47,0	36	41
		TC35L11/4NPTB	TC35L11/4NPT	35	1,1/4”	45,0	34,5	57,0	25,5	56,0	41	50
		TC42L11/2NPTB	TC42L11/2NPT	42	1,1/2”	51,0	40,0	61,0	26,0	63,0	50	60
S	630	TC06S1/4NPTB	TC06S1/4NPT	6	1/4”	23,0	16,0	26,0	15,0	31,0	12	17
		TC08S1/4NPTB	TC08S1/4NPT	8	1/4”	24,0	17,0	27,0	15,0	32,0	14	19
		TC10S3/8NPTB	TC10S3/8NPT	10	3/8”	25,0	17,5	28,0	15,0	34,0	17	22
		TC12S3/8NPTB	TC12S3/8NPT	12	3/8”	29,0	21,5	28,0	15,0	38,0	17	24
		TC14S1/2NPTB	TC14S1/2NPT	14	1/2”	30,0	22,0	34,0	19,5	40,0	19	27
	400	TC16S1/2NPTB	TC16S1/2NPT	16	1/2”	33,0	24,5	36,0	19,5	43,0	24	30
		TC20S3/4NPTB	TC20S3/4NPT	20	3/4”	37,0	26,5	42,0	20,0	48,0	27	36
		TC25S1NPTB	TC25S1NPT	25	1”	42,0	30,0	48,0	25,0	54,0	36	46
		TC30S11/4NPTB	TC30S11/4NPT	30	1,1/4”	49,0	35,5	57,0	25,5	62,0	41	50
	315	TC38S11/2NPTB	TC38S11/2NPT	38	1,1/2”	57,0	41,0	61,0	26,0	72,0	50	60

ADATTATORE MASCHIO DI ESTREMITÀ A T CENTRALE
Filetto Metrico Conico

MALE STUD BRANCH TEE
Metric Taper Thread

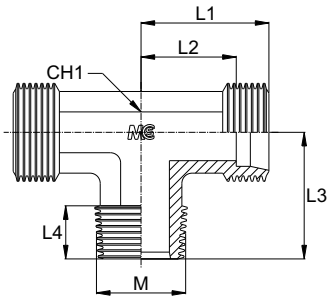

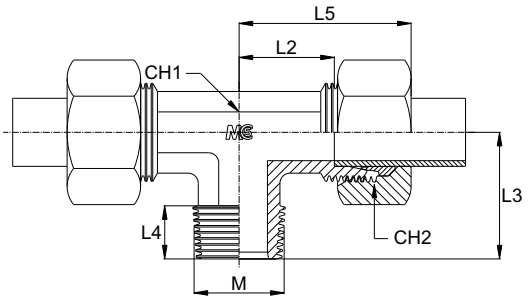

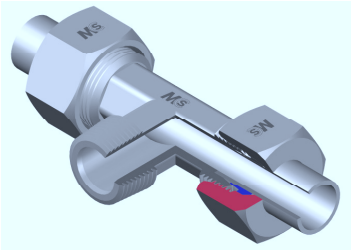

Serie Series	Bar W.P.	Codice (Corpo) Part Number (Body)	Codice (Completo) Part Number (Complete)	Ø Est. Tubo Tube O.D.	M	L1	L2	L3	L4	L5	CH1	CH2
L	315	TC06LM101B	TC06LM101	6	10x1,0	19,0	12,0	20,0	8,0	27,0	12	14
		TC08LM1215B	TC08LM1215	8	12x1,5	21,0	14,0	26,0	12,0	29,0	12	17
		TC10LM1415B	TC10LM1415	10	14x1,5	22,0	15,0	27,0	12,0	30,0	14	19
		TC12LM1615B	TC12LM1615	12	16x1,5	24,0	17,0	28,0	12,0	32,0	17	22
		TC15LM1815B	TC15LM1815	15	18x1,5	28,0	21,0	32,0	12,0	36,0	19	27
		TC18LM2215B	TC18LM2215	18	22x1,5	31,0	23,5	36,0	14,0	40,0	24	32
S	630	TC06SM1215B	TC06SM1215	6	12x1,5	23,0	16,0	26,0	12,0	31,0	12	17
		TC08SM1415B	TC08SM1415	8	14x1,5	24,0	17,0	27,0	12,0	32,0	14	19
		TC10SM1615B	TC10SM1615	10	16x1,5	25,0	17,5	28,0	12,0	34,0	17	22
		TC12SM1815B	TC12SM1815	12	18x1,5	29,0	21,5	28,0	12,0	38,0	17	24
		TC14SM2015B	TC14SM2015	14	20x1,5	30,0	22,0	32,0	14,0	40,0	19	27
	400	TC16SM2215B	TC16SM2215	16	22x1,5	33,0	24,5	32,0	14,0	43,0	24	30

ADATTATORE MASCHIO DI ESTREMITÀ A T CENTRALE
Filetto Gas Cilindrico

MALE STUD BRANCH TEE
BSP Parallel Thread

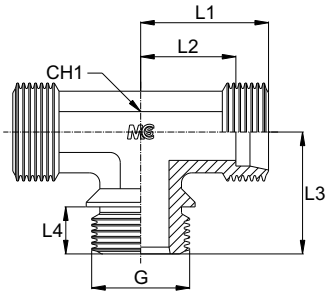

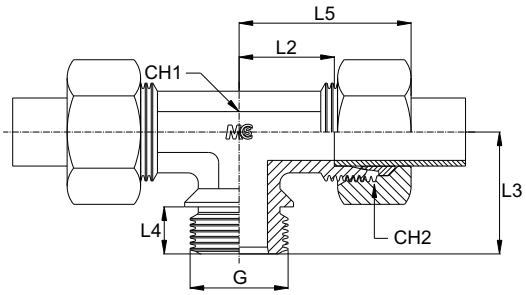

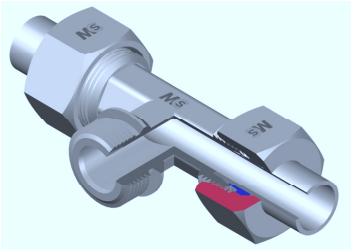

Serie Series	Bar W.P.	Codice (Corpo) Part Number (Body)	Codice (Completo) Part Number (Complete)	Ø Est. Tubo Tube O.D.	G	L1	L2	L3	L4	L5	CH1	CH2
L	160	TC22LRG3/4B	TC22LRG3/4	22	3/4"	35,0	27,5	43,5	15,0	44,0	27	36
		TC28LRG1B	TC28LRG1	28	1"	38,0	30,5	49,0	17,0	47,0	36	41
		TC35LRG11/4B	TC35LRG11/4	35	1,1/4"	45,0	34,5	57,0	19,0	56,0	41	50
		TC42LRG11/2B	TC42LRG11/2	42	1,1/2"	51,0	40,0	64,0	20,0	63,0	50	60
S	400	TC20SRG3/4B	TC20SRG3/4	20	3/4"	37,0	26,5	43,5	15,0	48,0	27	36
		TC25SRG1B	TC25SRG1	25	1"	42,0	30,0	49,0	17,0	54,0	36	46
		TC30SRG11/4B	TC30SRG11/4	30	1,1/4"	49,0	35,5	57,0	19,0	62,0	41	50
	315	TC38SRG11/2B	TC38SRG11/2	38	1,1/2"	57,0	41,0	64,0	20,0	72,0	50	60

ADATTATORE MASCHIO DI ESTREMITÀ A T CENTRALE
Filetto Metrico Cilindrico

MALE STUD BRANCH TEE
Metric Parallel Thread

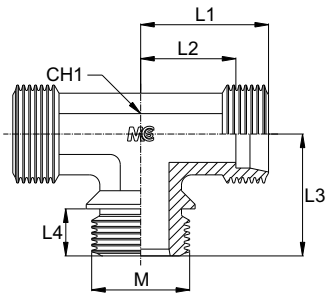

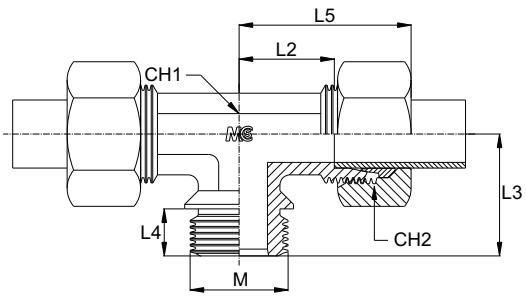

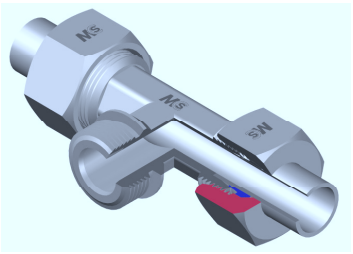

Serie Series	Bar W.P.	Codice (Corpo) Part Number (Body)	Codice (Completo) Part Number (Complete)	Ø Est. Tubo Tube O.D.	M	L1	L2	L3	L4	L5	CH1	CH2
L	160	TC22LM2615B	TC22LM2615	22	26x1,5	35,0	27,5	43,5	15,0	44,0	27	36
		TC28LM332B	TC28LM332	28	33x2,0	38,0	30,5	49,0	17,0	47,0	36	41
		TC35LM422B	TC35LM422	35	42x2,0	45,0	34,5	57,0	19,0	56,0	41	50
		TC42LM482B	TC42LM482	42	48x2,0	51,0	40,0	64,0	20,0	63,0	50	60
S	400	TC20SM272B	TC20SM272	20	27x2,0	37,0	26,5	43,5	15,0	48,0	27	36
		TC25SM332B	TC25SM332	25	33x2,0	42,0	30,0	49,0	17,0	54,0	36	46
		TC30SM422B	TC30SM422	30	42x2,0	49,0	35,5	57,0	19,0	62,0	41	50
	315	TC38SM482B	TC38SM482	38	48x2,0	57,0	41,0	64,0	20,0	72,0	50	60

ADATTATORE MASCHIO DI ESTREMITÀ A T LATERALE

Filetto Gas Conico

MALE STUD BARREL TEE

BSP Taper Thread

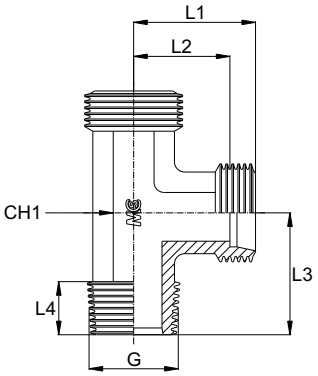

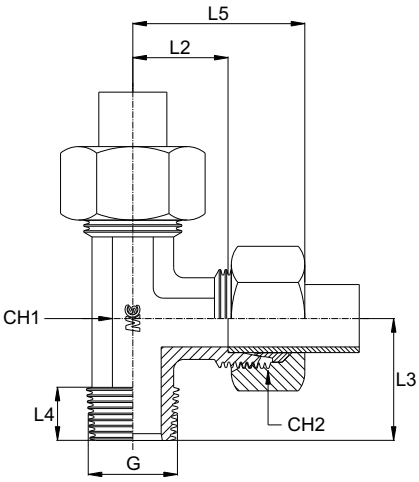

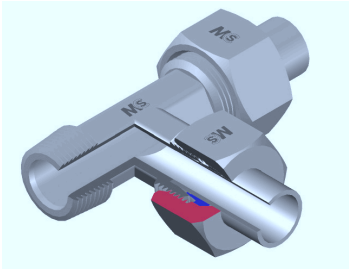

Serie Series	Bar W.P.	Codice (Corpo) Part Number (Body)	Codice (Completo) Part Number (Complete)	Ø Est. Tubo Tube O.D.	G	L1	L2	L3	L4	L5	CH1	CH2
L	315	TL06L1/8BSPTB	TL06L1/8BSPT	6	1/8"	19,0	12,0	20,0	8,0	27,0	12	14
		TL08L1/4BSPTB	TL08L1/4BSPT	8	1/4"	21,0	14,0	26,0	12,0	29,0	12	17
		TL10L1/4BSPTB	TL10L1/4BSPT	10	1/4"	22,0	15,0	27,0	12,0	30,0	14	19
		TL12L3/8BSPTB	TL12L3/8BSPT	12	3/8"	24,0	17,0	28,0	12,0	32,0	17	22
		TL15L1/2BSPTB	TL15L1/2BSPT	15	1/2"	28,0	21,0	34,0	14,0	36,0	19	27
		TL18L1/2BSPTB	TL18L1/2BSPT	18	1/2"	31,0	23,5	36,0	14,0	40,0	24	32
	160	TL22L3/4BSPTB	TL22L3/4BSPT	22	3/4"	35,0	27,5	42,0	16,0	44,0	27	36
		TL28L1BSPTB	TL28L1BSPT	28	1"	38,0	30,5	48,0	18,0	47,0	36	41
		TL35L11/4BSPTB	TL35L11/4BSPT	35	1,1/4"	45,0	34,5	54,0	20,0	56,0	41	50
		TL42L11/2BSPTB	TL42L11/2BSPT	42	1,1/2"	51,0	40,0	61,0	22,0	63,0	50	60
S	630	TL06S1/4BSPTB	TL06S1/4BSPT	6	1/4"	23,0	16,0	26,0	12,0	31,0	12	17
		TL08S1/4BSPTB	TL08S1/4BSPT	8	1/4"	24,0	17,0	27,0	12,0	32,0	14	19
		TL10S3/8BSPTB	TL10S3/8BSPT	10	3/8"	25,0	17,5	28,0	12,0	34,0	17	22
		TL12S3/8BSPTB	TL12S3/8BSPT	12	3/8"	29,0	21,5	28,0	12,0	38,0	17	24
		TL14S1/2BSPTB	TL14S1/2BSPT	14	1/2"	30,0	22,0	32,0	14,0	40,0	19	27
	400	TL16S1/2BSPTB	TL16S1/2BSPT	16	1/2"	33,0	24,5	32,0	14,0	43,0	24	30
		TL20S3/4BSPTB	TL20S3/4BSPT	20	3/4"	37,0	26,5	42,0	16,0	48,0	27	36
		TL25S1BSPTB	TL25S1BSPT	25	1"	42,0	30,0	48,0	18,0	54,0	36	46
		TL30S11/4BSPTB	TL30S11/4BSPT	30	1,1/4"	49,0	35,5	54,0	20,0	62,0	41	50
	315	TL38S11/2BSPTB	TL38S11/2BSPT	38	1,1/2"	57,0	41,0	61,0	22,0	72,0	50	60

ADATTATORE MASCHIO DI ESTREMITÀ A T LATERALE

Filetto NPT

MALE STUD BARREL TEE

NPT Thread

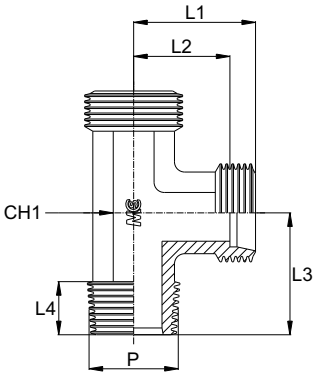

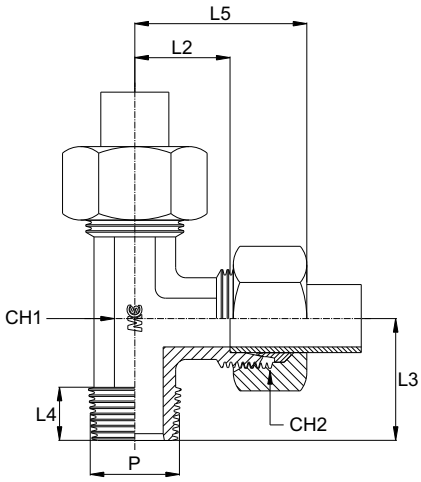

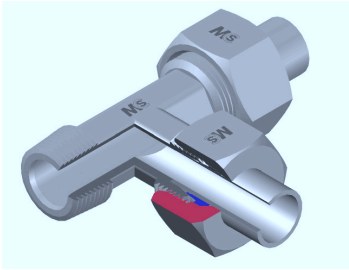

Serie Series	Bar W.P.	Codice (Corpo) Part Number (Body)	Codice (Completo) Part Number (Complete)	Ø Est. Tubo Tube O.D.	P	L1	L2	L3	L4	L5	CH1	CH2
L	315	TL06L1/8NPTB	TL06L1/8NPT	6	1/8"	19,0	12,0	20,0	10,0	27,0	12	14
		TL08L1/4NPTB	TL08L1/4NPT	8	1/4"	21,0	14,0	26,0	15,0	29,0	12	17
		TL10L1/4NPTB	TL10L1/4NPT	10	1/4"	22,0	15,0	27,0	15,0	30,0	14	19
		TL12L3/8NPTB	TL12L3/8NPT	12	3/8"	24,0	17,0	28,0	15,0	32,0	17	22
		TL15L1/2NPTB	TL15L1/2NPT	15	1/2"	28,0	21,0	34,0	19,5	36,0	19	27
		TL18L1/2NPTB	TL18L1/2NPT	18	1/2"	31,0	23,5	36,0	19,5	40,0	24	32
	160	TL22L3/4NPTB	TL22L3/4NPT	22	3/4"	35,0	27,5	42,0	20,0	44,0	27	36
		TL28L1NPTB	TL28L1NPT	28	1"	38,0	30,5	48,0	25,0	47,0	36	41
		TL35L11/4NPTB	TL35L11/4NPT	35	1,1/4"	45,0	34,5	57,0	25,5	56,0	41	50
		TL42L11/2NPTB	TL42L11/2NPT	42	1,1/2"	51,0	40,0	61,0	26,0	63,0	50	60
S	630	TL06S1/4NPTB	TL06S1/4NPT	6	1/4"	23,0	16,0	26,0	15,0	31,0	12	17
		TL08S1/4NPTB	TL08S1/4NPT	8	1/4"	24,0	17,0	27,0	15,0	32,0	14	19
		TL10S3/8NPTB	TL10S3/8NPT	10	3/8"	25,0	17,5	28,0	15,0	34,0	17	22
		TL12S3/8NPTB	TL12S3/8NPT	12	3/8"	29,0	21,5	28,0	15,0	38,0	17	24
		TL14S1/2NPTB	TL14S1/2NPT	14	1/2"	30,0	22,0	34,0	19,5	40,0	19	27
	400	TL16S1/2NPTB	TL16S1/2NPT	16	1/2"	33,0	24,5	36,0	19,5	43,0	24	30
		TL20S3/4NPTB	TL20S3/4NPT	20	3/4"	37,0	26,5	42,0	20,0	48,0	27	36
		TL25S1NPTB	TL25S1NPT	25	1"	42,0	30,0	48,0	25,0	54,0	36	46
		TL30S11/4NPTB	TL30S11/4NPT	30	1,1/4"	49,0	35,5	57,0	25,5	62,0	41	50
	315	TL38S11/2NPTB	TL38S11/2NPT	38	1,1/2"	57,0	41,0	61,0	26,0	72,0	50	60

ADATTATORE MASCHIO DI ESTREMITÀ A T LATERALE

Filetto Metrico Conico

MALE STUD BARREL TEE

Metric Taper Thread

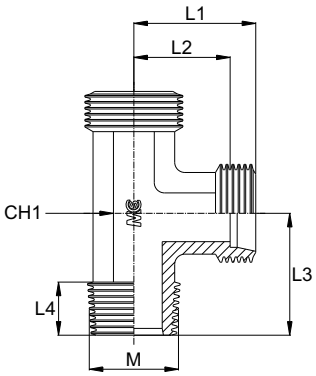

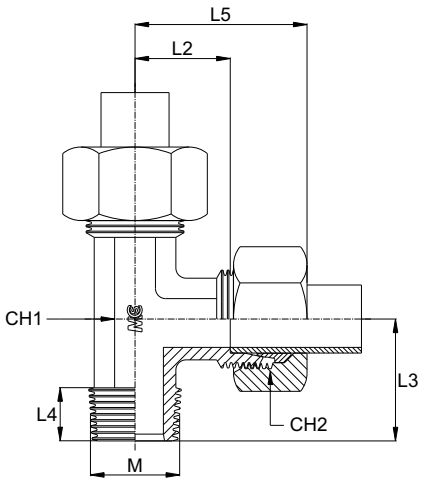

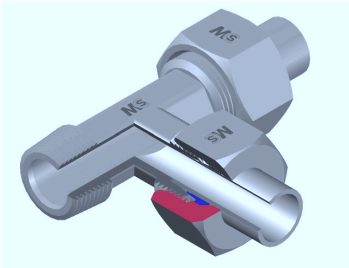

Serie Series	Bar W.P.	Codice (Corpo) Part Number (Body)	Codice (Completo) Part Number (Complete)	Ø Est. Tubo Tube O.D.	M	L1	L2	L3	L4	L5	CH1	CH2
L	315	TL06LM101B	TL06LM101	6	10x1,0	19,0	12,0	20,0	8,0	27,0	12	14
		TL08LM1215B	TL08LM1215	8	12x1,5	21,0	14,0	26,0	12,0	29,0	12	17
		TL10LM1415B	TL10LM1415	10	14x1,5	22,0	15,0	27,0	12,0	30,0	14	19
		TL12LM1615B	TL12LM1615	12	16x1,5	24,0	17,0	28,0	12,0	32,0	17	22
		TL15LM1815B	TL15LM1815	15	18x1,5	28,0	21,0	32,0	12,0	36,0	19	27
		TL18LM2215B	TL18LM2215	18	22x1,5	31,0	23,5	36,0	14,0	40,0	24	32
S	630	TL06SM1215B	TL06SM1215	6	12x1,5	23,0	16,0	26,0	12,0	31,0	12	17
		TL08SM1415B	TL08SM1415	8	14x1,5	24,0	17,0	27,0	12,0	32,0	14	19
		TL10SM1615B	TL10SM1615	10	16x1,5	25,0	17,5	28,0	12,0	34,0	17	22
		TL12SM1815B	TL12SM1815	12	18x1,5	29,0	21,5	28,0	12,0	38,0	17	24
		TL14SM2015B	TL14SM2015	14	20x1,5	30,0	22,0	32,0	14,0	40,0	19	27
	400	TL16SM2215B	TL16SM2215	16	22x1,5	33,0	24,5	32,0	14,0	43,0	24	30

ADATTATORE MASCHIO DI ESTREMITÀ A T LATERALE

Filetto Gas Cilindrico

MALE STUD BARREL TEE

BSP Parallel Thread

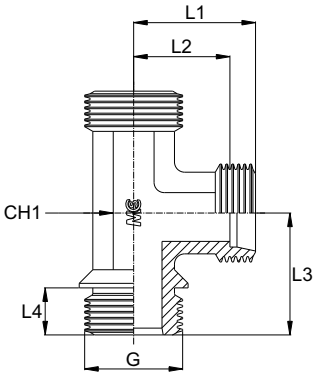

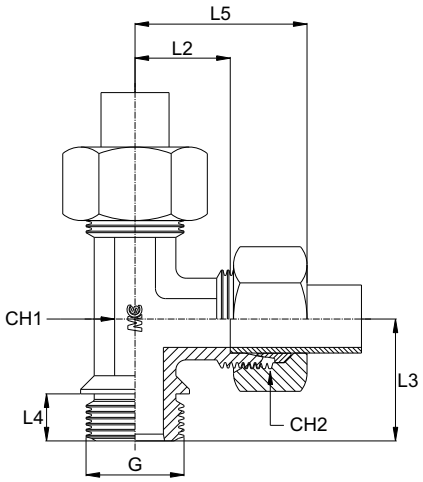

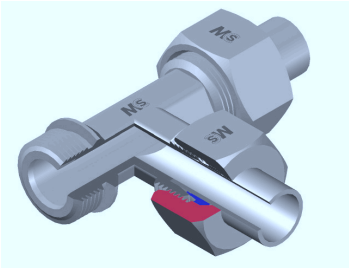

Serie Series	Bar W.P.	Codice (Corpo) Part Number (Body)	Codice (Completo) Part Number (Complete)	Ø Est. Tubo Tube O.D.	G	L1	L2	L3	L4	L5	CH1	CH2
L	160	TL22LRG3/4B	TL22LRG3/4	22	3/4"	35,0	27,5	43,5	15,0	44,0	27	36
		TL28LRG1B	TL28LRG1	28	1"	38,0	30,5	49,0	17,0	47,0	36	41
		TL35LRG11/4B	TL35LRG11/4	35	1,1/4"	45,0	34,5	57,0	19,0	56,0	41	50
		TL42LRG11/2B	TL42LRG11/2	42	1,1/2"	51,0	40,0	64,0	20,0	63,0	50	60
S	400	TL20SRG3/4B	TL20SRG3/4	20	3/4"	37,0	26,5	43,5	15,0	48,0	27	36
		TL25SRG1B	TL25SRG1	25	1"	42,0	30,0	49,0	17,0	54,0	36	46
		TL30SRG11/4B	TL30SRG11/4	30	1,1/4"	49,0	35,5	57,0	19,0	62,0	41	50
	315	TL38SRG11/2B	TL38SRG11/2	38	1,1/2"	57,0	41,0	64,0	20,0	72,0	50	60

ADATTATORE MASCHIO DI ESTREMITÀ A T LATERALE

Filetto Metrico Cilindrico

MALE STUD BARREL TEE

Metric Parallel Thread

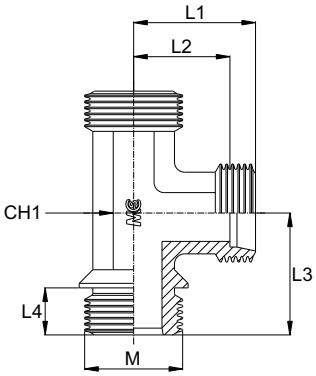

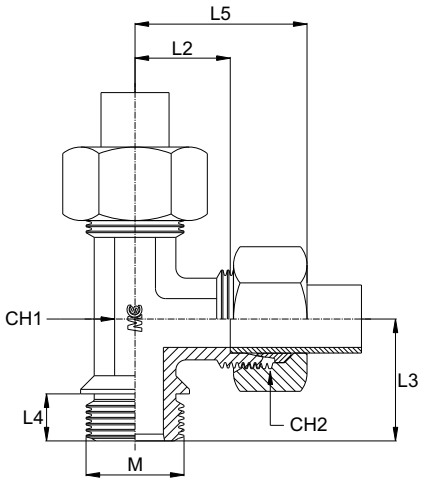

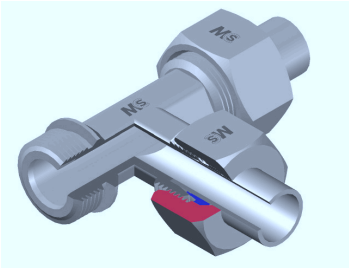

Serie Series	Bar W.P.	Codice (Corpo) Part Number (Body)	Codice (Completo) Part Number (Complete)	Ø Est. Tubo Tube O.D.	M	L1	L2	L3	L4	L5	CH1	CH2
L	160	TL22LM2615B	TL22LM2615	22	26x1,5	35,0	27,5	43,5	15,0	44,0	27	36
		TL28LM332B	TL28LM332	28	33x2,0	38,0	30,5	49,0	17,0	47,0	36	41
		TL35LM422B	TL35LM422	35	42x2,0	45,0	34,5	57,0	19,0	56,0	41	50
		TL42LM482B	TL42LM482	42	48x2,0	51,0	40,0	64,0	20,0	63,0	50	60
S	400	TL20SM272B	TL20SM272	20	27x2,0	37,0	26,5	43,5	15,0	48,0	27	36
		TL25SM332B	TL25SM332	25	33x2,0	42,0	30,0	49,0	17,0	54,0	36	46
		TL30SM422B	TL30SM422	30	42x2,0	49,0	35,5	57,0	19,0	62,0	41	50
	315	TL38SM482B	TL38SM482	38	48x2,0	57,0	41,0	64,0	20,0	72,0	50	60

ADATTATORE MASCHIO INTERMEDIO
STRAIGHT UNION COUPLING

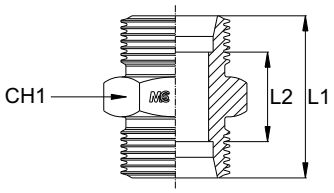

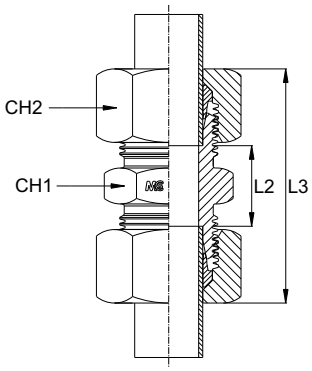

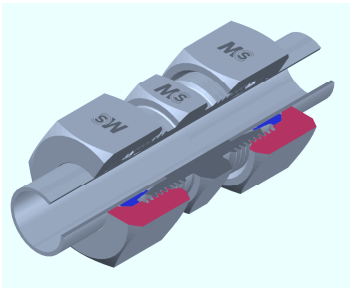

Serie Series	Bar W.P.	Codice (Corpo) Part Number (Body)	Codice (Completo) Part Number (Complete)	Ø Est. Tubo Tube O.D.	L1	L2	L3	CH1	CH2
L	630	GV06LB	GV06L	6	24,0	10,0	39,0	14	14
		GV08LB	GV08L	8	25,0	11,0	40,0	14	17
		GV10LB	GV10L	10	27,0	13,0	42,0	17	19
	450	GV12LB	GV12L	12	28,0	14,0	43,0	19	22
		GV15LB	GV15L	15	30,0	16,0	46,0	24	27
		GV18LB	GV18L	18	31,0	16,0	48,0	27	32
	300	GV22LB	GV22L	22	35,0	20,0	52,0	32	36
		GV28LB	GV28L	28	36,0	21,0	54,0	41	41
		GV35LB	GV35L	35	41,0	20,0	63,0	46	50
		GV42LB	GV42L	42	43,0	21,0	66,0	55	60
S	900	GV06SB	GV06S	6	30,0	16,0	45,0	14	17
		GV08SB	GV08S	8	32,0	18,0	47,0	17	19
	800	GV10SB	GV10S	10	32,0	17,0	49,0	19	22
	700	GV12SB	GV12S	12	34,0	19,0	51,0	22	24
		GV14SB	GV14S	14	38,0	22,0	57,0	24	27
	650	GV16SB	GV16S	16	38,0	21,0	57,0	27	30
	420	GV20SB	GV20S	20	44,0	23,0	66,0	32	36
		GV25SB	GV25S	25	50,0	26,0	74,0	41	46
		GV30SB	GV30S	30	54,0	27,0	80,0	46	50
		GV38SB	GV38S	38	61,0	29,0	90,0	55	60

ADATTATORE INTERMEDIO PASSAPARETE CON CONTRODADO
BULKHEAD STRAIGHT UNION COUPLING WITH LOCKNUT

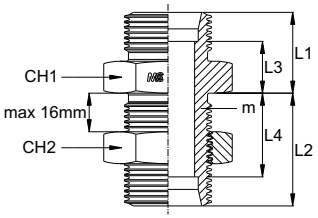

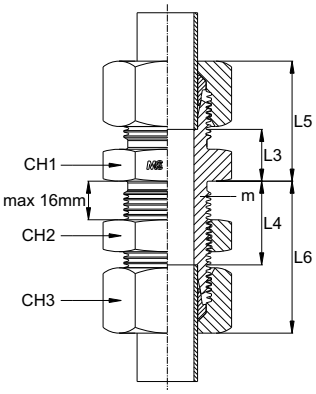

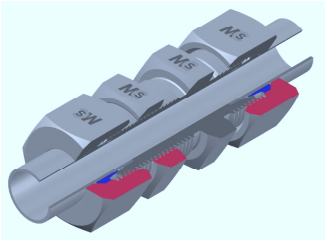

Serie Series	Bar W.P.	Codice (Corpo) Part Number (Body)	Codice (Completo) Part Number (Complete)	Ø Est. Tubo Tube O.D.	m	L1	L2	L3	L4	L5	L6	CH1	CH2	CH3
L	630	GSV06LB	GSV06L	6	12x1,5	14,0	34,0	7,0	27,0	22,0	42,0	17	17	14
		GSV08LB	GSV08L	8	14x1,5	15,0	34,0	8,0	27,0	23,0	42,0	19	19	17
		GSV10LB	GSV10L	10	16x1,5	17,0	35,0	10,0	28,0	25,0	43,0	22	22	19
	450	GSV12LB	GSV12L	12	18x1,5	17,0	36,0	10,0	29,0	25,0	44,0	24	24	22
		GSV15LB	GSV15L	15	22x1,5	19,0	38,0	12,0	31,0	27,0	46,0	27	30	27
		GSV18LB	GSV18L	18	26x1,5	21,0	40,0	13,5	32,5	30,0	49,0	32	36	32
	300	GSV22LB	GSV22L	22	30x2,0	24,0	42,0	16,5	34,5	33,0	51,0	36	41	36
		GSV28LB	GSV28L	28	36x2,0	26,0	43,0	18,5	35,5	35,0	52,0	41	46	41
		GSV35LB	GSV35L	35	45x2,0	29,0	47,0	18,5	36,5	40,0	58,0	50	55	50
		GSV42LB	GSV42L	42	52x2,0	30,0	47,0	19,0	36,0	42,0	59,0	60	65	60
S	900	GSV06SB	GSV06S	6	14x1,5	19,0	36,0	12,0	29,0	27,0	44,0	19	19	17
		GSV08SB	GSV08S	8	16x1,5	20,0	36,0	13,0	29,0	28,0	44,0	22	22	19
	800	GSV10SB	GSV10S	10	18x1,5	22,0	37,0	14,5	29,5	31,0	46,0	24	24	22
	700	GSV12SB	GSV12S	12	20x1,5	22,0	38,0	14,5	30,5	31,0	47,0	27	27	24
		GSV14SB	GSV14S	14	22x1,5	25,0	40,0	17,0	32,0	35,0	50,0	30	30	27
	650	GSV16SB	GSV16S	16	24x1,5	25,0	40,0	16,5	31,5	35,0	50,0	32	32	30
	420	GSV20SB	GSV20S	20	30x2,0	28,0	44,0	17,5	33,5	39,0	55,0	41	41	36
		GSV25SB	GSV25S	25	36x2,0	32,0	47,0	20,0	35,0	44,0	59,0	46	46	46
		GSV30SB	GSV30S	30	42x2,0	35,0	51,0	21,5	37,5	48,0	64,0	50	50	50
		GSV38SB	GSV38S	38	52x2,0	38,0	53,0	22,0	37,0	53,0	68,0	65	65	60

ADATTATORE INTERMEDIO PASSAPARETE A GOMITO CON CONTRODADO
BULKHEAD ELBOW COUPLING WITH LOCKNUT

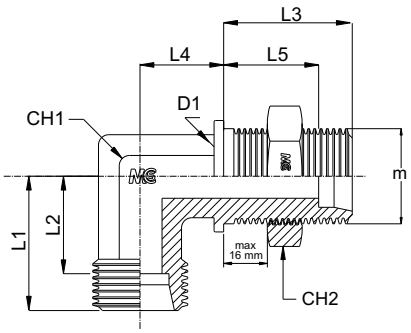

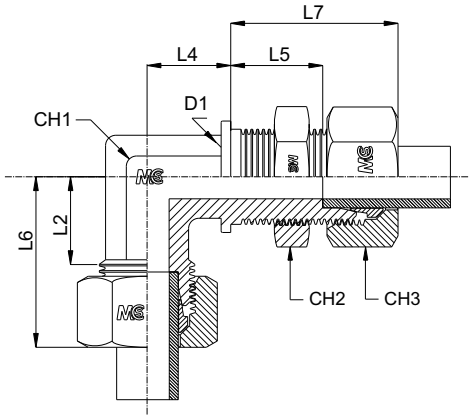

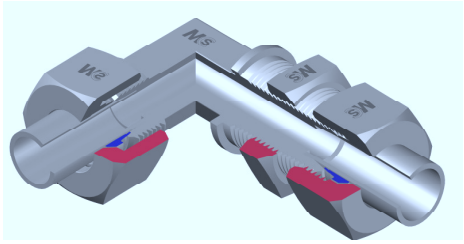

Serie Series	Bar W.P.	Codice (Corpo) Part Number (Body)	Codice (Completo) Part Number (Complete)	Ø Est. Tubo Tube O.D.	D1	m	L1	L2	L3	L4	L5	L6	L7	CH1	CH2	CH3
L	315	WSV06LB	WSV06L	6	17	12x1,5	19,0	12,0	34,0	14,0	27,0	19,0	42	12	17	14
		WSV08LB	WSV08L	8	19	14x1,5	21,0	14,0	34,0	17,0	27,0	21,0	42	12	19	17
		WSV10LB	WSV10L	10	22	16x1,5	22,0	15,0	35,0	18,0	28,0	22,0	43	14	22	19
		WSV12LB	WSV12L	12	24	18x1,5	24,0	17,0	36,0	20,0	29,0	24,0	44	17	24	22
		WSV15LB	WSV15L	15	27	22x1,5	28,0	21,0	38,0	23,0	31,0	28,0	46	19	30	27
		WSV18LB	WSV18L	18	32	26x1,5	31,0	23,5	40,0	24,0	32,5	31,0	49	24	36	32
	160	WSV22LB	WSV22L	22	36	30x2,0	35,0	27,5	42,0	30,0	34,5	35,0	51	27	41	36
		WSV28LB	WSV28L	28	42	36x2,0	38,0	30,5	43,0	34,0	35,5	38,0	52	36	46	41
		WSV35LB	WSV35L	35	50	45x2,0	45,0	34,5	47,0	39,0	36,5	45,0	58	41	55	50
		WSV42LB	WSV42L	42	60	52x2,0	51,0	40,0	47,0	43,0	36,0	51,0	59	50	65	60
S	630	WSV06SB	WSV06S	6	19	14x1,5	23,0	16,0	36,0	17,0	29,0	23,0	44	12	19	17
		WSV08SB	WSV08S	8	22	16x1,5	24,0	17,0	36,0	18,0	29,0	24,0	44	14	22	19
		WSV10SB	WSV10S	10	24	18x1,5	25,0	17,5	37,0	20,0	29,5	25,0	46	17	24	22
		WSV12SB	WSV12S	12	27	20x1,5	29,0	21,5	38,0	21,0	30,5	29,0	47	17	27	24
		WSV14SB	WSV14S	14	27	22x1,5	30,0	22,0	40,0	23,0	32,0	30,0	50	19	30	27
	400	WSV16SB	WSV16S	16	30	24x1,5	33,0	24,5	40,0	24,0	31,5	33,0	50	24	32	30
		WSV20SB	WSV20S	20	36	30x2,0	37,0	26,5	44,0	30,0	33,5	37,0	55	27	41	36
		WSV25SB	WSV25S	25	42	36x2,0	42,0	30,0	47,0	34,0	35,0	42,0	59	36	46	46
		WSV30SB	WSV30S	30	50	42x2,0	49,0	35,5	51,0	39,0	37,5	49,0	64	41	50	50
	315	WSV38SB	WSV38S	38	60	52x2,0	57,0	41,0	53,0	43,0	37,0	57,0	68	50	65	60

ADATTATORE MASCHIO INTERMEDIO A GOMITO
MALE ELBOW UNION COUPLING

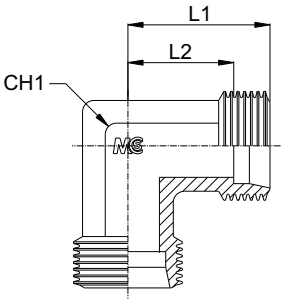

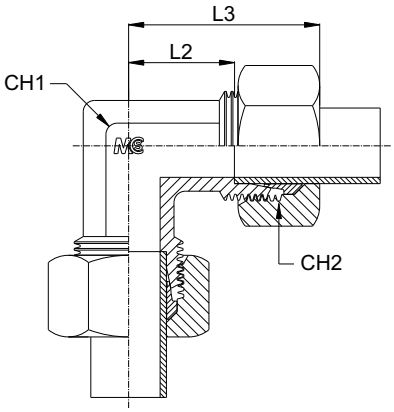

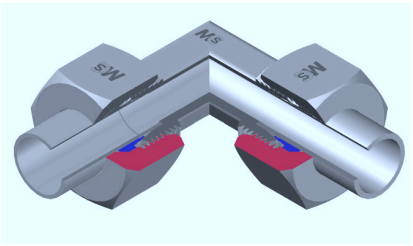

Serie Series	Bar W.P.	Codice (Corpo) Part Number (Body)	Codice (Completo) Part Number (Complete)	Ø Est. Tubo Tube O.D.	L1	L2	L3	CH1	CH2
L	630	LV06LB	LV06L	6	19,0	12,0	27,0	12	14
		LV08LB	LV08L	8	21,0	14,0	29,0	12	17
		LV10LB	LV10L	10	22,0	15,0	30,0	14	19
	450	LV12LB	LV12L	12	24,0	17,0	32,0	17	22
		LV15LB	LV15L	15	28,0	21,0	36,0	19	27
		LV18LB	LV18L	18	31,0	23,5	40,0	24	32
	300	LV22LB	LV22L	22	35,0	27,5	44,0	27	36
		LV28LB	LV28L	28	38,0	30,5	47,0	36	41
		LV35LB	LV35L	35	45,0	34,5	56,0	41	50
		LV42LB	LV42L	42	51,0	40,0	63,0	50	60
S	900	LV06SB	LV06S	6	23,0	16,0	31,0	12	17
		LV08SB	LV08S	8	24,0	17,0	32,0	14	19
	800	LV10SB	LV10S	10	25,0	17,5	34,0	17	22
	700	LV12SB	LV12S	12	29,0	21,5	38,0	17	24
		LV14SB	LV14S	14	30,0	22,0	40,0	19	27
	650	LV16SB	LV16S	16	33,0	24,5	43,0	24	30
	420	LV20SB	LV20S	20	37,0	26,5	48,0	27	36
		LV25SB	LV25S	25	42,0	30,0	54,0	36	46
		LV30SB	LV30S	30	49,0	35,5	62,0	41	50
		LV38SB	LV38S	38	57,0	41,0	72,0	50	60

ADATTATORE MASCHIO INTERMEDIO A T
MALE TEE UNION COUPLING

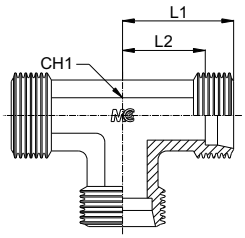

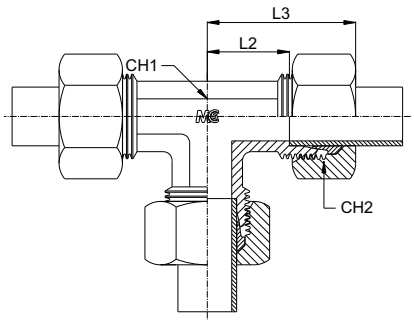

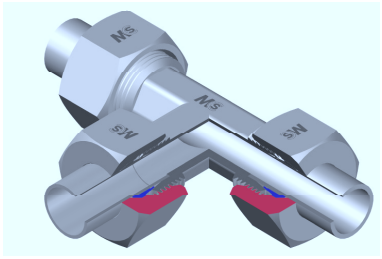

Serie Series	Bar W.P.	Codice (Corpo) Part Number (Body)	Codice (Completo) Part Number (Complete)	Ø Est. Tubo Tube O.D.	L1	L2	L3	CH1	CH2
L	630	TV06LB	TV06L	6	19,0	12,0	27,0	12	14
		TV08LB	TV08L	8	21,0	14,0	29,0	12	17
		TV10LB	TV10L	10	22,0	15,0	30,0	14	19
	450	TV12LB	TV12L	12	24,0	17,0	32,0	17	22
		TV15LB	TV15L	15	28,0	21,0	36,0	19	27
		TV18LB	TV18L	18	31,0	23,5	40,0	24	32
	300	TV22LB	TV22L	22	35,0	27,5	44,0	27	36
		TV28LB	TV28L	28	38,0	30,5	47,0	36	41
		TV35LB	TV35L	35	45,0	34,5	56,0	41	50
		TV42LB	TV42L	42	51,0	40,0	63,0	50	60
S	900	TV06SB	TV06S	6	23,0	16,0	31,0	12	17
		TV08SB	TV08S	8	24,0	17,0	32,0	14	19
	800	TV10SB	TV10S	10	25,0	17,5	34,0	17	22
	700	TV12SB	TV12S	12	29,0	21,5	38,0	17	24
		TV14SB	TV14S	14	30,0	22,0	40,0	19	27
	650	TV16SB	TV16S	16	33,0	24,5	43,0	24	30
	420	TV20SB	TV20S	20	37,0	26,5	48,0	27	36
		TV25SB	TV25S	25	42,0	30,0	54,0	36	46
		TV30SB	TV30S	30	49,0	35,5	62,0	41	50
		TV38SB	TV38S	38	57,0	41,0	72,0	50	60

ADATTATORE MASCHIO INTERMEDIO A CROCE
MALE CROSS UNION COUPLING

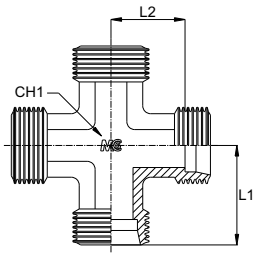

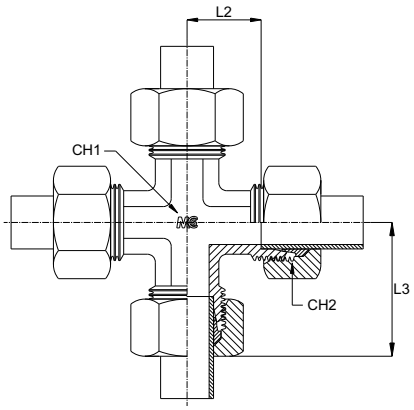

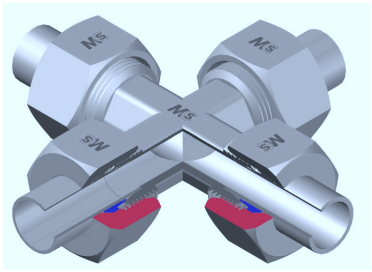

Serie Series	Bar W.P.	Codice (Corpo) Part Number (Body)	Codice (Completo) Part Number (Complete)	Ø Est. Tubo Tube O.D.	L1	L2	L3	CH1	CH2
L	315	CRV06LB	CRV06L	6	19,0	12,0	27,0	12	14
		CRV08LB	CRV08L	8	21,0	14,0	29,0	12	17
		CRV10LB	CRV10L	10	22,0	15,0	30,0	14	19
		CRV12LB	CRV12L	12	24,0	17,0	32,0	17	22
		CRV15LB	CRV15L	15	28,0	21,0	36,0	19	27
		CRV18LB	CRV18L	18	31,0	23,5	40,0	24	32
	160	CRV22LB	CRV22L	22	35,0	27,5	44,0	27	36
		CRV28LB	CRV28L	28	38,0	30,5	47,0	36	41
		CRV35LB	CRV35L	35	45,0	34,5	56,0	41	50
		CRV42LB	CRV42L	42	51,0	40,0	63,0	50	60
S	630	CRV06SB	CRV06S	6	23,0	16,0	31,0	12	17
		CRV08SB	CRV08S	8	24,0	17,0	32,0	14	19
		CRV10SB	CRV10S	10	25,0	17,5	34,0	17	22
		CRV12SB	CRV12S	12	29,0	21,5	38,0	17	24
		CRV14SB	CRV14S	14	30,0	22,0	40,0	19	27
	400	CRV16SB	CRV16S	16	33,0	24,5	43,0	24	30
		CRV20SB	CRV20S	20	37,0	26,5	48,0	27	36
		CRV25SB	CRV25S	25	42,0	30,0	54,0	36	46
		CRV30SB	CRV30S	30	49,0	35,5	62,0	41	50
	315	CRV38SB	CRV38S	38	57,0	41,0	72,0	50	60

ADATTATORE MASCHIO INTERMEDIO RIDOTTO - Serie L
STRAIGHT REDUCING MALE COUPLING - L Series

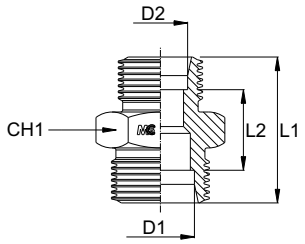

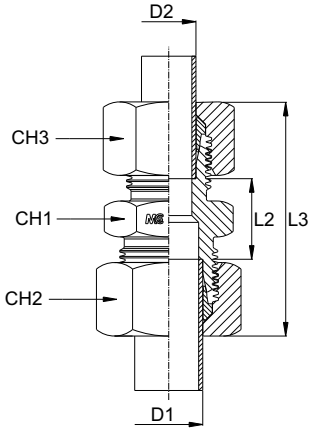

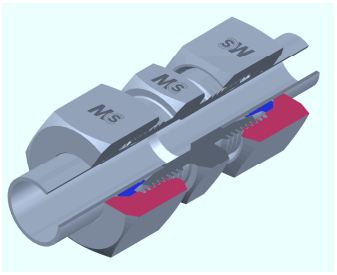

Serie Series	Bar W.P.	Codice (Corpo) Part Number (Body)	Codice (Completo) Part Number (Complete)	Ø Est. Tubo Tube O.D.		L1	L2	L3	CH1	CH2	CH3
				D1	D2						
L	630	GRV0806LB	GRV0806L	8	6	25,0	11,0	40,5	14	17	14
		GRV1006LB	GRV1006L	10	6	26,0	12,0	41,5	17	19	14
		GRV1008LB	GRV1008L	10	8	26,0	12,0	42,0	17	19	17
	450	GRV1206LB	GRV1206L	12	6	27,0	13,0	42,0	19	22	14
		GRV1208LB	GRV1208L	12	8	27,0	13,0	42,5	19	22	17
		GRV1210LB	GRV1210L	12	10	28,0	14,0	43,5	19	22	19
		GRV1506LB	GRV1506L	15	6	28,0	14,0	50,5	24	14	27
		GRV1508LB	GRV1508L	15	8	28,0	14,0	50,5	24	17	27
		GRV1510LB	GRV1510L	15	10	29,0	15,0	45,0	24	27	19
		GRV1512LB	GRV1512L	15	12	29,0	15,0	44,5	24	27	22
		GRV1808LB	GRV1808L	18	8	29,0	14,5	52,0	27	27	32
		GRV1810LB	GRV1810L	18	10	30,0	15,5	47,0	27	32	19
		GRV1812LB	GRV1812L	18	12	30,0	15,5	46,5	27	32	22
		GRV1815LB	GRV1815L	18	15	31,0	16,5	48,0	27	32	27
	300	GRV2208LB	GRV2208L	22	8	32,0	17,5	56,5	32	17	36
		GRV2210LB	GRV2210L	22	10	32,0	17,5	57,0	32	19	36
		GRV2212LB	GRV2212L	22	12	32,0	17,5	48,5	32	36	22
		GRV2215LB	GRV2215L	22	15	33,0	18,5	50,0	32	36	27
		GRV2218LB	GRV2218L	22	18	33,0	18,0	51,0	32	36	32
		GRV2810LB	GRV2810L	28	10	35,0	20,5	60,0	41	19	41
		GRV2812LB	GRV2812L	28	12	33,5	19,0	60,0	41	22	41
		GRV2815LB	GRV2815L	28	15	33,5	19,0	62,5	41	27	41
		GRV2818LB	GRV2818L	28	18	34,0	19,0	52,0	41	41	32
		GRV2822LB	GRV2822L	28	22	36,0	21,0	54,0	41	41	36
		GRV3515LB	GRV3515L	35	15	-	-	-	46	27	50
		GRV3518LB	GRV3518L	35	18	37,0	19,0	66,5	46	32	50
		GRV3522LB	GRV3522L	35	22	39,0	21,0	59,0	46	50	36
		GRV3528LB	GRV3528L	35	28	39,0	21,0	59,0	46	50	41
		GRV4215LB	GRV4215L	42	15	-	-	-	55	27	60
		GRV4218LB	GRV4218L	42	18	-	-	-	55	32	60
		GRV4222LB	GRV4222L	42	22	41,0	22,5	70,5	55	36	60
		GRV4228LB	GRV4228L	42	28	41,0	22,5	71,0	55	41	60
		GRV4235LB	GRV4235L	42	35	43,0	21,5	75,0	55	50	60

ADATTATORE MASCHIO INTERMEDIO RIDOTTO - Serie S
STRAIGHT REDUCING MALE COUPLING - S Series

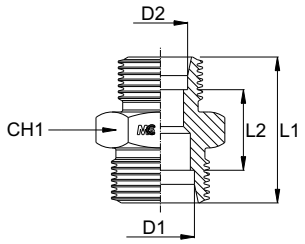

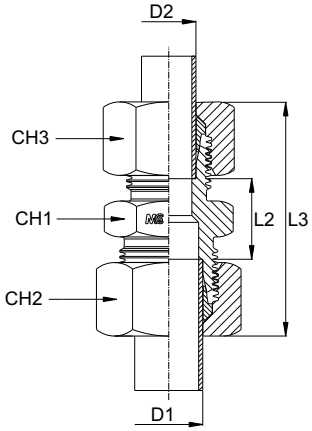

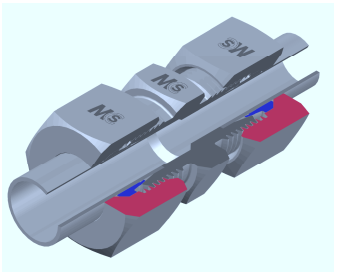

Serie Series	Bar W.P.	Codice (Corpo) Part Number (Body)	Codice (Completo) Part Number (Complete)	Ø Est. Tubo Tube O.D.		L1	L2	L3	CH1	CH2	CH3
				D1	D2						
S	800	GRV0806SB	GRV0806S	8	6	32,0	18,0	48,0	17	19	17
		GRV1006SB	GRV1006S	10	6	32,0	17,5	48,5	19	22	17
		GRV1008SB	GRV1008S	10	8	32,0	17,5	48,5	19	22	19
	700	GRV1206SB	GRV1206S	12	6	34,0	19,5	50,5	22	24	17
		GRV1208SB	GRV1208S	12	8	34,0	19,5	50,5	22	24	19
		GRV1210SB	GRV1210S	12	10	34,0	19,0	51,0	22	24	22
		GRV1406SB	GRV1406S	14	6	-	-	-	24	17	27
		GRV1408SB	GRV1408S	14	8	-	-	-	24	19	27
		GRV1410SB	GRV1410S	14	10	36,0	20,5	54,5	24	27	22
		GRV1412SB	GRV1412S	14	12	36,0	20,5	54,5	24	27	24
	650	GRV1606SB	GRV1606S	16	6	35,5	20,0	59,5	27	17	30
		GRV1608SB	GRV1608S	16	8	35,5	20,0	59,5	27	19	30
		GRV1610SB	GRV1610S	16	10	36,0	20,0	60,5	27	22	30
		GRV1612SB	GRV1612S	16	12	36,0	20,0	54,5	27	30	24
		GRV1614SB	GRV1614S	16	14	38,0	21,5	58,0	27	30	27
	420	GRV2006SB	GRV2006S	20	6	41,0	23,5	64,5	32	17	36
		GRV2008SB	GRV2008S	20	8	38,5	21,0	64,5	32	19	36
		GRV2010SB	GRV2010S	20	10	40,0	22,0	59,5	32	36	22
		GRV2012SB	GRV2012S	20	12	40,0	22,0	59,5	32	36	24
		GRV2014SB	GRV2014S	20	14	41,5	23,0	68,5	32	27	36
		GRV2016SB	GRV2016S	20	16	42,0	23,0	63,0	32	36	30
		GRV2506SB	GRV2506S	25	6	-	-	-	41	17	46
		GRV2508SB	GRV2508S	25	8	45,5	26,5	71,5	41	19	46
		GRV2510SB	GRV2510S	25	10	47,0	27,5	72,5	41	22	46
		GRV2512SB	GRV2512S	25	12	43,5	24,0	72,5	41	24	46
		GRV2514SB	GRV2514S	25	14	46,5	26,5	74,5	41	27	46
		GRV2516SB	GRV2516S	25	16	46,0	25,5	68,0	41	46	30
		GRV2520SB	GRV2520S	25	20	48,0	25,5	71,0	41	46	36
		GRV3010SB	GRV3010S	30	10	-	-	-	46	22	50
		GRV3012SB	GRV3012S	30	12	48,0	27,0	74,5	46	24	50
		GRV3014SB	GRV3014S	30	14	-	-	-	46	27	50
		GRV3016SB	GRV3016S	30	16	48,0	26,0	78,5	46	30	50
		GRV3020SB	GRV3020S	30	20	50,0	26,0	74,0	46	50	36
		GRV3025SB	GRV3025S	30	25	52,0	26,5	77,0	46	50	46
		GRV3810SB	GRV3810S	38	10	-	-	-	55	22	60
		GRV3812SB	GRV3812S	38	12	-	-	-	55	24	60
		GRV3814SB	GRV3814S	38	14	-	-	-	55	27	60
		GRV3816SB	GRV3816S	38	16	50,5	26,0	85,0	55	30	60
		GRV3820SB	GRV3820S	38	20	54,5	28,0	88,0	55	36	60
		GRV3825SB	GRV3825S	38	25	57,0	29,0	94,0	55	46	60
		GRV3830SB	GRV3830S	38	30	59,0	29,5	87,0	55	60	50

ADATTATORE A GOMITO DI ESTREMITÀ A CODOLO
STUD STANDPIPE ELBOW

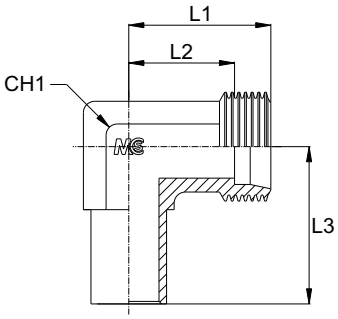

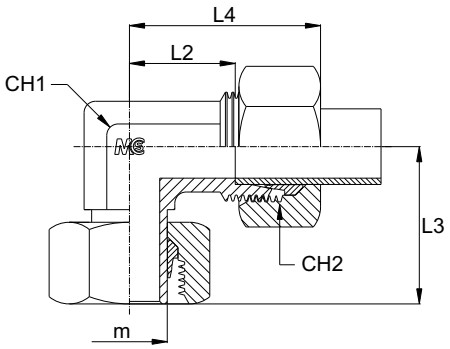

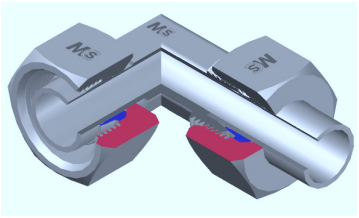

Serie Series	Bar W.P.	Codice (Corpo) Part Number (Body)	Codice (Completo) Part Number (Complete)	Ø Est. Tubo Tube O.D.	L1	L2	L3	L4	CH1	CH2
L	315	EVW06LB	EVW06L	6	19,0	12,0	26,0	27,0	12	14
		EVW08LB	EVW08L	8	21,0	14,0	27,5	29,0	12	17
		EVW10LB	EVW10L	10	22,0	15,0	29,0	30,0	14	19
		EVW12LB	EVW12L	12	24,0	17,0	29,5	32,0	17	22
		EVW15LB	EVW15L	15	28,0	21,0	32,5	36,0	19	27
		EVW18LB	EVW18L	18	31,0	23,5	35,5	40,0	24	32
	160	EVW22LB	EVW22L	22	35,0	27,5	38,5	44,0	27	36
		EVW28LB	EVW28L	28	38,0	30,5	41,5	47,0	36	41
		EVW35LB	EVW35L	35	45,0	34,5	51,0	56,0	41	50
		EVW42LB	EVW42L	42	51,0	40,0	56,0	63,0	50	60
S	630	EVW06SB	EVW06S	6	23,0	16,0	27,0	31,0	12	17
		EVW08SB	EVW08S	8	24,0	17,0	27,5	32,0	14	19
		EVW10SB	EVW10S	10	25,0	17,5	30,0	34,0	17	22
		EVW12SB	EVW12S	12	29,0	21,5	31,0	38,0	17	24
		EVW14SB	EVW14S	14	30,0	22,0	35,0	40,0	19	27
	400	EVW16SB	EVW16S	16	33,0	24,5	36,5	43,0	24	30
		EVW20SB	EVW20S	20	37,0	26,5	44,0	48,0	27	36
		EVW25SB	EVW25S	25	42,0	30,0	50,0	54,0	36	46
		EVW30SB	EVW30S	30	49,0	35,5	55,0	62,0	41	50
	315	EVW38SB	EVW38S	38	57,0	41,0	63,0	72,0	50	60

ADATTATORE INTERMEDIO A T RIDOTTO - Serie L
REDUCING TEE UNION COUPLING - L Series

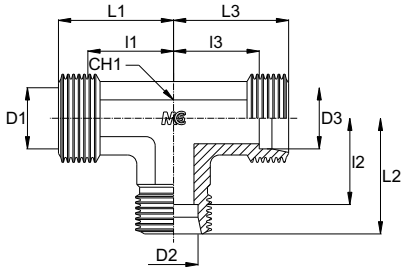

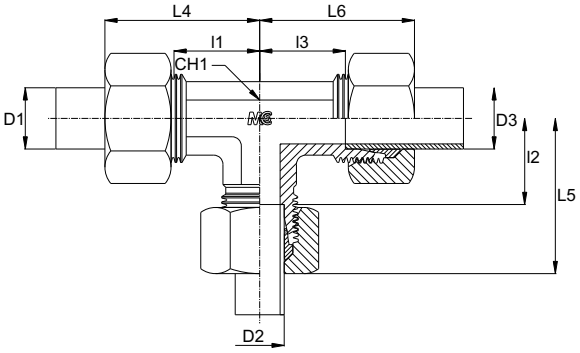

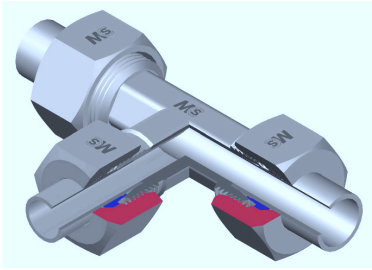

Serie Series	Bar W.P.	Codice (Corpo) Part Number (Body)	Codice (Completo) Part Number (Complete)	Ø Est. Tubo Tube O.D.			L1	L2	L3	L4	L5	L6	I1	I2	I3	CH1
				D1	D2	D3										
L	630	TRV060806LB	TRV060806L	6	8	6	21,0	21,0	21,0	29,0	29,0	29,0	14,0	14,0	14,0	12
		TRV080608LB	TRV080608L	8	6	8	21,0	21,0	21,0	29,0	29,0	29,0	14,0	14,0	14,0	12
		TRV061006LB	TRV061006L	6	10	6	21,0	22,0	21,0	29,0	30,0	29,0	14,0	15,0	14,0	14
		TRV081008LB	TRV081008L	8	10	8	21,0	22,0	21,0	29,0	30,0	29,0	14,0	15,0	14,0	14
		TRV100610LB	TRV100610L	10	6	10	22,0	21,0	22,0	30,0	29,0	30,0	15,0	14,0	15,0	14
		TRV100810LB	TRV100810L	10	8	10	22,0	21,0	22,0	30,0	29,0	30,0	15,0	14,0	15,0	14
		TRV101006LB	TRV101006L	10	10	6	22,0	22,0	21,0	30,0	30,0	29,0	15,0	15,0	14,0	14
	450	TRV081208LB	TRV081208L	8	12	8	23,0	24,0	23,0	31,0	32,0	31,0	16,0	17,0	16,0	17
		TRV120612LB	TRV120612L	12	6	12	24,0	23,0	24,0	32,0	31,0	32,0	17,0	16,0	17,0	17
		TRV120808LB	TRV120808L	12	8	8	24,0	23,0	23,0	32,0	31,0	31,0	17,0	16,0	16,0	17
		TRV120812LB	TRV120812L	12	8	12	24,0	23,0	24,0	32,0	31,0	32,0	17,0	16,0	17,0	17
		TRV121010LB	TRV121010L	12	10	10	24,0	24,0	24,0	32,0	32,0	32,0	17,0	17,0	17,0	17
		TRV121012LB	TRV121012L	12	10	12	24,0	24,0	24,0	32,0	32,0	32,0	17,0	17,0	17,0	17
		TRV121210LB	TRV121210L	12	12	10	24,0	24,0	24,0	32,0	32,0	32,0	17,0	17,0	17,0	17
		TRV101510LB	TRV101510L	10	15	10	27,0	28,0	27,0	35,0	36,0	35,0	20,0	21,0	20,0	19
		TRV121512LB	TRV121512L	12	15	12	27,0	28,0	27,0	35,0	36,0	35,0	20,0	21,0	20,0	19
		TRV150615LB	TRV150615L	15	6	15	28,0	25,0	28,0	36,0	33,0	36,0	21,0	18,0	21,0	19
		TRV151015LB	TRV151015L	15	10	15	28,0	27,0	28,0	36,0	35,0	36,0	21,0	20,0	21,0	19
		TRV151212LB	TRV151212L	15	12	12	28,0	27,0	27,0	36,0	35,0	35,0	21,0	20,0	20,0	19
		TRV151215LB	TRV151215L	15	12	15	28,0	27,0	28,0	36,0	35,0	36,0	21,0	20,0	21,0	19
		TRV151512LB	TRV151512L	15	15	12	28,0	28,0	27,0	36,0	36,0	35,0	21,0	21,0	20,0	19
		TRV121812LB	TRV121812L	12	18	12	30,0	31,0	30,0	38,0	40,0	38,0	23,0	23,5	23,0	24
		TRV181010LB	TRV181010L	18	10	10	31,0	30,0	30,0	40,0	38,0	38,0	23,5	23,0	23,0	24
		TRV181018LB	TRV181018L	18	10	18	31,0	30,0	31,0	40,0	38,0	40,0	23,5	23,0	23,5	24
		TRV181218LB	TRV181218L	18	12	18	31,0	30,0	31,0	40,0	38,0	40,0	23,5	23,0	23,5	24
		TRV181518LB	TRV181518L	18	15	18	31,0	31,0	31,0	40,0	39,0	40,0	23,5	24,0	23,5	24
		TRV181810LB	TRV181810L	18	18	10	31,0	31,0	30,0	40,0	40,0	38,0	23,5	23,5	23,0	24
	300	TRV221022LB	TRV221022L	22	10	22	35,0	33,0	35,0	44,0	41,0	44,0	27,5	26,0	27,5	27
		TRV221222LB	TRV221222L	22	12	22	35,0	33,0	35,0	44,0	41,0	44,0	27,5	26,0	27,5	27
		TRV221515LB	TRV221515L	22	15	15	35,0	34,0	34,0	44,0	42,0	42,0	27,5	27,0	27,0	27
		TRV221522LB	TRV221522L	22	15	22	35,0	34,0	35,0	44,0	42,0	44,0	27,5	27,0	27,5	27
		TRV221818LB	TRV221818L	22	18	18	35,0	34,0	34,0	44,0	43,0	43,0	27,5	26,5	26,5	27
		TRV221822LB	TRV221822L	22	18	22	35,0	34,0	35,0	44,0	43,0	44,0	27,5	26,5	27,5	27
		TRV222218LB	TRV222218L	22	22	18	35,0	35,0	34,0	44,0	44,0	43,0	27,5	27,5	26,5	27
		TRV281028LB	TRV281028L	28	10	28	38,0	36,0	38,0	47,0	44,0	47,0	30,5	29,0	30,5	36
		TRV281228LB	TRV281228L	28	12	28	38,0	36,0	38,0	47,0	44,0	47,0	30,5	29,0	30,5	36
		TRV281528LB	TRV281528L	28	15	28	38,0	37,0	38,0	47,0	45,0	47,0	30,5	30,0	30,5	36
		TRV281828LB	TRV281828L	28	18	28	38,0	37,0	38,0	47,0	46,0	47,0	30,5	29,5	30,5	36
		TRV282222LB	TRV282222L	28	22	22	38,0	38,0	38,0	47,0	47,0	47,0	30,5	30,5	30,5	36
		TRV282228LB	TRV282228L	28	22	28	38,0	38,0	38,0	47,0	47,0	47,0	30,5	30,5	30,5	36

ADATTATORE INTERMEDIO A T RIDOTTO - Serie S
REDUCING TEE UNION COUPLING - S Series

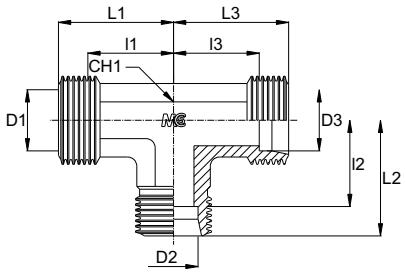

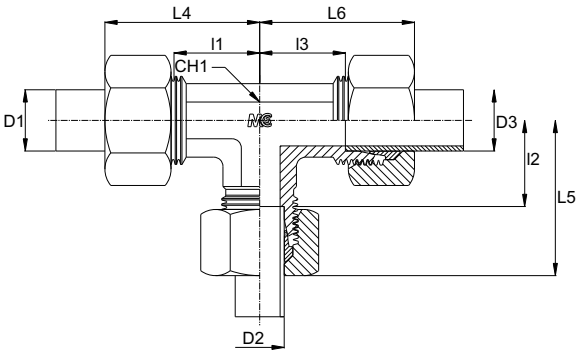

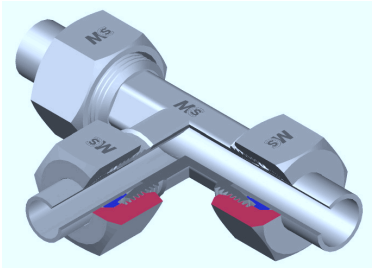

Serie Series	Bar W.P.	Codice (Corpo) Part Number (Body)	Codice (Completo) Part Number (Complete)	Ø Est. Tubo Tube O.D.			L1	L2	L3	L4	L5	L6	I1	I2	I3	CH1
				D1	D2	D3										
S	800	TRV100610SB	TRV100610S	10	6	10	25,0	25,0	25,0	34,0	33,0	34,0	17,5	18,0	17,5	17
		TRV120808SB	TRV120808S	12	8	8	29,0	25,0	25,0	38,0	33,0	33,0	21,5	18,0	18,0	19
		TRV120812SB	TRV120812S	12	8	12	29,0	25,0	29,0	38,0	33,0	38,0	21,5	18,0	21,5	19
		TRV121012SB	TRV121012S	12	10	12	29,0	25,0	29,0	38,0	34,0	38,0	21,5	17,5	21,5	19
	650	TRV121612SB	TRV121612S	12	16	12	31,0	33,0	31,0	40,0	43,0	40,0	23,5	24,5	23,5	24
		TRV160616SB	TRV160616S	16	6	16	33,0	31,0	33,0	43,0	39,0	43,0	24,5	24,0	24,5	24
		TRV160816SB	TRV160816S	16	8	16	33,0	31,0	33,0	43,0	39,0	43,0	24,5	24,0	24,5	24
		TRV161016SB	TRV161016S	16	10	16	33,0	31,0	33,0	43,0	40,0	43,0	24,5	23,5	24,5	24
		TRV161216SB	TRV161216S	16	12	16	33,0	31,0	33,0	43,0	40,0	43,0	24,5	23,5	24,5	24
		TRV162016SB	TRV162016S	16	20	16	36,0	37,0	36,0	46,0	48,0	46,0	27,5	26,5	27,5	27
	420	TRV201020SB	TRV201020S	20	10	20	37,0	34,0	37,0	48,0	43,0	48,0	26,5	26,5	26,5	27
		TRV201220SB	TRV201220S	20	12	20	37,0	34,0	37,0	48,0	43,0	48,0	26,5	26,5	26,5	27
		TRV201620SB	TRV201620S	20	16	20	37,0	36,0	37,0	48,0	46,0	48,0	26,5	27,5	26,5	27
		TRV202520SB	TRV202520S	20	25	20	40,0	42,0	40,0	51,0	54,0	51,0	29,5	30,0	29,5	36
		TRV251625SB	TRV251625S	25	16	25	42,0	39,0	42,0	54,0	49,0	54,0	30,0	30,5	30,0	36
		TRV252025SB	TRV252025S	25	20	25	42,0	40,0	42,0	54,0	51,0	54,0	30,0	29,5	30,0	36
		TRV253025SB	TRV253025S	25	30	25	47,0	49,0	47,0	59,0	62,0	59,0	35,0	35,5	35,0	41

ADATTATORE DI ESTREMITÀ A T LATERALE A CODOLO
STUD STANDPIPE BARREL TEE

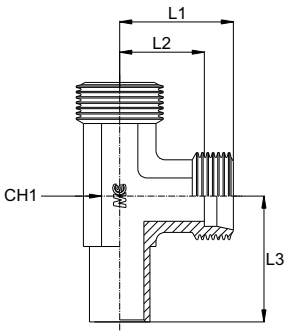

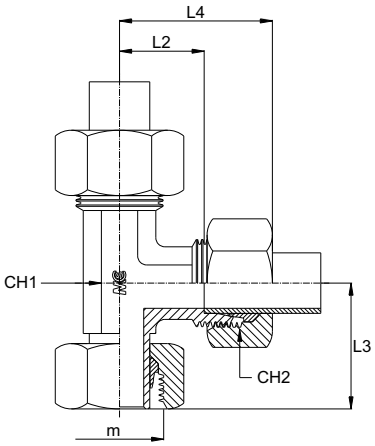

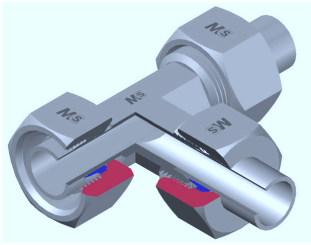

Serie Series	Bar W.P.	Codice (Corpo) Part Number (Body)	Codice (Completo) Part Number (Complete)	Ø Est. Tubo Tube O.D.	L1	L2	L3	L4	CH1	CH2
L	315	TLVW06LB	TLVW06L	6	19,0	12,0	26,0	27,0	12	14
		TLVW08LB	TLVW08L	8	21,0	14,0	27,5	29,0	12	17
		TLVW10LB	TLVW10L	10	22,0	15,0	29,0	30,0	14	19
		TLVW12LB	TLVW12L	12	24,0	17,0	29,5	32,0	17	22
		TLVW15LB	TLVW15L	15	28,0	21,0	32,5	36,0	19	27
		TLVW18LB	TLVW18L	18	31,0	23,5	35,5	40,0	24	32
	160	TLVW22LB	TLVW22L	22	35,0	27,5	38,5	44,0	27	36
		TLVW28LB	TLVW28L	28	38,0	30,5	41,5	47,0	36	41
		TLVW35LB	TLVW35L	35	45,0	34,5	51,0	56,0	41	50
		TLVW42LB	TLVW42L	42	51,0	40,0	56,0	63,0	50	60
S	630	TLVW06SB	TLVW06S	6	23,0	16,0	27,0	31,0	12	17
		TLVW08SB	TLVW08S	8	24,0	17,0	27,5	32,0	14	19
		TLVW10SB	TLVW10S	10	25,0	17,5	30,0	34,0	17	22
		TLVW12SB	TLVW12S	12	29,0	21,5	30,5	38,0	17	24
		TLVW14SB	TLVW14S	14	30,0	22,0	34,5	40,0	19	27
	400	TLVW16SB	TLVW16S	16	33,0	24,5	36,5	43,0	24	30
		TLVW20SB	TLVW20S	20	37,0	26,5	44,0	48,0	27	36
		TLVW25SB	TLVW25S	25	42,0	30,0	50,0	54,0	36	46
		TLVW30SB	TLVW30S	30	49,0	35,5	55,0	62,0	41	50
	315	TLVW38SB	TLVW38S	38	57,0	41,0	63,0	72,0	50	60

ADATTATORE TERMINALE PASSAPARETE CON CONTRODADO CON GUARNIZIONE
BULCKHEAD STUD COUPLING WITH LOCKNUT AND CAPTIVE SEAL

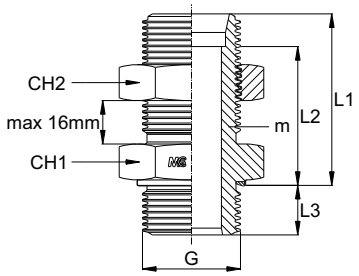

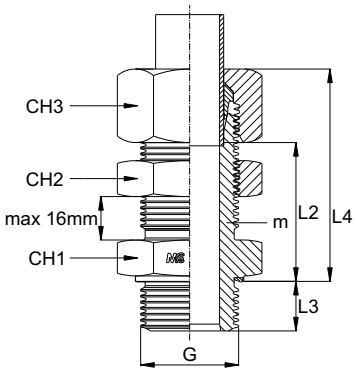

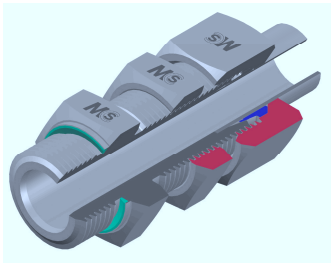

Serie Series	Bar W.P.	Codice (Corpo) Part Number (Body)	Codice (Completo) Part Number (Complete)	Ø Est. Tubo Tube O.D.	m	G	L1	L2	L3	L4	CH1	CH2	CH3
L	315	GSV06LG1/8VB	GSV06LG1/8V	6	12x1,5	1/8”	39,5	32,5	8,0	47,5	17	17	14
		GSV08LG1/4VB	GSV08LG1/4V	8	14x1,5	1/4”	41,0	34,0	12,0	49,0	19	19	17
		GSV10LG1/4VB	GSV10LG1/4V	10	16x1,5	1/4”	43,0	36,0	12,0	51,0	22	22	19
		GSV12LG3/8VB	GSV12LG3/8V	12	18x1,5	3/8”	44,5	37,5	12,0	52,5	24	24	22
		GSV15LG1/2VB	GSV15LG1/2V	15	22x1,5	1/2”	48,0	41,0	14,0	56,0	27	30	27
		GSV18LG1/2VB	GSV18LG1/2V	18	26x1,5	1/2”	52,0	44,5	14,0	61,0	32	36	32
	160	GSV22LG3/4VB	GSV22LG3/4V	22	30x2,0	3/4”	55,0	47,5	16,0	64,0	36	41	36
		GSV28LG1VB	GSV28LG1V	28	36x2,0	1”	58,0	50,5	18,0	67,0	41	46	41
		GSV35LG11/4VB	GSV35LG11/4V	35	45x2,0	1,1/4”	63,0	52,5	20,0	74,0	50	55	50
		GSV42LG11/2VB	GSV42LG11/2V	42	52x2,0	1,1/2”	64,0	53,0	22,0	76,0	60	65	60
S	630	GSV06SG1/4VB	GSV06SG1/4V	6	14x1,5	1/4”	45,0	38,0	12,0	53,0	19	19	17
		GSV08SG1/4VB	GSV08SG1/4V	8	16x1,5	1/4”	46,0	39,0	12,0	54,0	22	22	19
		GSV10SG3/8VB	GSV10SG3/8V	10	18x1,5	3/8”	49,0	41,5	12,0	58,0	24	24	22
		GSV12SG3/8VB	GSV12SG3/8V	12	20x1,5	3/8”	50,0	42,5	12,0	59,0	27	27	24
		GSV14SG1/2VB	GSV14SG1/2V	14	22x1,5	1/2”	54,0	46,0	14,0	64,0	30	30	27
	400	GSV16SG1/2VB	GSV16SG1/2V	16	24x1,5	1/2”	54,0	45,5	14,0	64,0	32	32	30
		GSV20SG3/4VB	GSV20SG3/4V	20	30x2,0	3/4”	59,0	48,5	16,0	72,0	41	41	36
		GSV25SG1VB	GSV25SG1V	25	36x2,0	1”	64,0	52,0	18,0	76,0	46	46	46
		GSV30SG11/4VB	GSV30SG11/4V	30	42x2,0	1,1/4”	69,0	55,5	20,0	82,0	50	50	50
	315	GSV38SG11/2VB	GSV38SG11/2V	38	52x2,0	1,1/2”	72,0	56,0	22,0	87,0	60	65	60

ADATTATORE DI ESTREMITÀ A T CENTRALE A CODOLO
STUD STANDPIPE BRANCH TEE

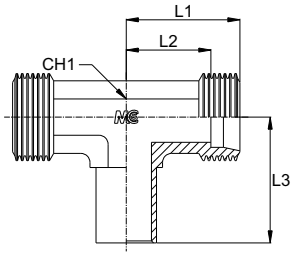

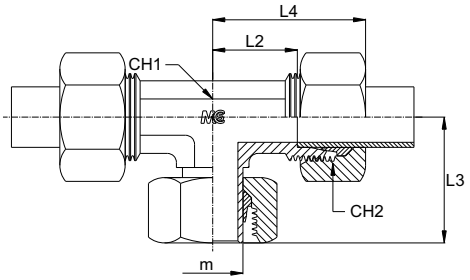

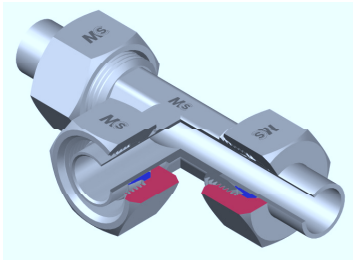

Serie Series	Bar W.P.	Codice (Corpo) Part Number (Body)	Codice (Completo) Part Number (Complete)	Ø Est. Tubo Tube O.D.	m	L1	L2	L3	L4	CH1	CH2
L	315	TCVW06LB	TCVW06L	6	12x1,5	19,0	12,0	26,0	27,0	12	14
		TCVW08LB	TCVW08L	8	14x1,5	21,0	14,0	27,5	29,0	12	17
		TCVW10LB	TCVW10L	10	16x1,5	22,0	15,0	29,0	30,0	14	19
		TCVW12LB	TCVW12L	12	18x1,5	24,0	17,0	29,5	32,0	17	22
		TCVW15LB	TCVW15L	15	22x1,5	28,0	21,0	32,5	36,0	19	27
		TCVW18LB	TCVW18L	18	26x1,5	31,0	23,5	35,5	40,0	24	32
	160	TCVW22LB	TCVW22L	22	30x2,0	35,0	27,5	38,5	44,0	27	36
		TCVW28LB	TCVW28L	28	36x2,0	38,0	30,5	41,5	47,0	36	41
		TCVW35LB	TCVW35L	35	45x2,0	45,0	34,5	51,0	56,0	41	50
		TCVW42LB	TCVW42L	42	52x2,0	51,0	40,0	56,0	63,0	50	60
S	630	TCVW06SB	TCVW06S	6	14x1,5	23,0	16,0	27,0	31,0	12	17
		TCVW08SB	TCVW08S	8	16x1,5	24,0	17,0	27,5	32,0	14	19
		TCVW10SB	TCVW10S	10	18x1,5	25,0	17,5	30,0	34,0	17	22
		TCVW12SB	TCVW12S	12	20x1,5	29,0	21,5	31,0	38,0	17	24
		TCVW14SB	TCVW14S	14	22x1,5	30,0	22,0	35,0	40,0	19	27
	400	TCVW16SB	TCVW16S	16	24x1,5	33,0	24,5	36,5	43,0	24	30
		TCVW20SB	TCVW20S	20	30x2,0	37,0	26,5	44,5	48,0	27	36
		TCVW25SB	TCVW25S	25	36x2,0	42,0	30,0	50,0	54,0	36	46
		TCVW30SB	TCVW30S	30	42x2,0	49,0	35,5	55,0	62,0	41	50
	315	TCVW38SB	TCVW38S	38	52x2,0	57,0	41,0	63,0	72,0	50	60

ADATTATORE DI RIDUZIONE A CODOLO - Serie L
REDUCING STANDPIPE COUPLING - L Series

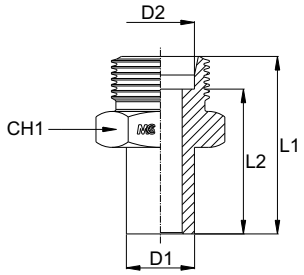

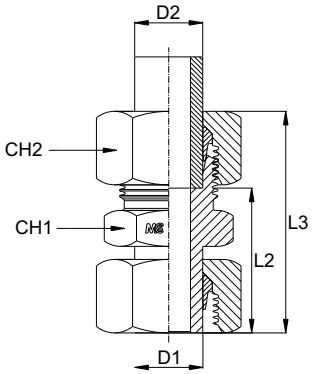

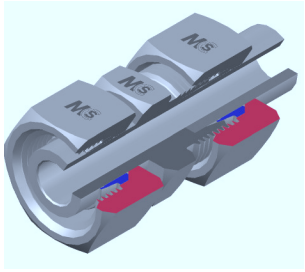

Serie Series	Bar W.P.	Codice (Corpo) Part Number (Body)	Codice (Completo) Part Number (Complete)	D1	D2	L1	L2	L3	CH1	CH2
L	315	EVGE0806LB	EVGE0806L	8	6	32,5	25,5	40,0	14	14
		EVGE1006LB	EVGE1006L	10	6	33,0	26,0	40,5	14	14
		EVGE1206LB	EVGE1206L	12	6	34,0	27,0	41,5	14	14
		EVGE1506LB	EVGE1506L	15	6	34,0	27,0	41,5	17	14
		EVGE1806LB	EVGE1806L	18	6	36,5	29,5	44,0	19	14
		EVGE1008LB	EVGE1008L	10	8	34,0	27,0	42,0	14	17
		EVGE1208LB	EVGE1208L	12	8	34,0	27,0	42,0	14	17
		EVGE1508LB	EVGE1508L	15	8	34,0	27,0	42,0	17	17
		EVGE1808LB	EVGE1808L	18	8	36,5	29,5	44,5	19	17
		EVGE1210LB	EVGE1210L	12	10	35,0	28,0	43,0	17	19
		EVGE1510LB	EVGE1510L	15	10	35,0	28,0	43,0	17	19
		EVGE1810LB	EVGE1810L	18	10	37,5	30,5	45,5	19	19
		EVGE1512LB	EVGE1512L	15	12	36,0	29,0	43,5	19	22
		EVGE1812LB	EVGE1812L	18	12	37,5	30,5	45,0	19	22
		EVGE1815LB	EVGE1815L	18	15	38,5	31,5	46,5	24	27
	160	EVGE2206LB	EVGE2206L	22	6	37,5	30,5	45,0	24	14
		EVGE2806LB	EVGE2806L	28	6	39,0	32,0	46,5	30	14
		EVGE3506LB	EVGE3506L	35	6	45,5	38,5	53,0	36	14
		EVGE4206LB	EVGE4206L	42	6	46,5	39,5	54,0	46	14
		EVGE2208LB	EVGE2208L	22	8	37,5	30,5	45,5	24	17
		EVGE2808LB	EVGE2808L	28	8	39,0	32,0	47,0	30	17
		EVGE3508LB	EVGE3508L	35	8	45,5	38,5	53,5	36	17
		EVGE4208LB	EVGE4208L	42	8	46,5	39,5	54,5	46	17
		EVGE2210LB	EVGE2210L	22	10	38,5	31,5	46,5	24	19
		EVGE2810LB	EVGE2810L	28	10	40,0	33,0	48,0	30	19
		EVGE3510LB	EVGE3510L	35	10	46,5	39,5	54,5	36	19
		EVGE4210LB	EVGE4210L	42	10	47,5	40,5	55,5	46	19
		EVGE2212LB	EVGE2212L	22	12	38,5	31,5	46,0	24	22
		EVGE2812LB	EVGE2812L	28	12	40,0	33,0	47,5	30	22
		EVGE3512LB	EVGE3512L	35	12	46,5	39,5	54,0	36	22
		EVGE4212LB	EVGE4212L	42	12	47,5	40,5	55,0	46	22
		EVGE2215LB	EVGE2215L	22	15	39,5	32,5	47,5	24	27
		EVGE2815LB	EVGE2815L	28	15	41,0	34,0	49,0	30	27
		EVGE3515LB	EVGE3515L	35	15	47,5	40,5	55,5	36	27
		EVGE4215LB	EVGE4215L	42	15	48,5	41,5	56,5	46	27
		EVGE2218LB	EVGE2218L	22	18	40,0	32,5	49,0	27	32
		EVGE2818LB	EVGE2818L	28	18	41,0	33,5	50,0	30	32
		EVGE3518LB	EVGE3518L	35	18	47,5	40,0	56,5	36	32
		EVGE4218LB	EVGE4218L	42	18	48,5	41,0	57,5	46	32
		EVGE2822LB	EVGE2822L	28	22	43,0	35,5	52,0	32	36
		EVGE3522LB	EVGE3522L	35	22	49,5	42,0	58,5	36	36
		EVGE4222LB	EVGE4222L	42	22	50,5	43,0	59,5	46	36
		EVGE3528LB	EVGE3528L	35	28	49,5	42,0	58,5	41	41
		EVGE4228LB	EVGE4228L	42	28	50,5	43,0	59,5	46	41
		EVGE4235LB	EVGE4235L	42	35	52,5	42,0	63,5	46	50

ADATTATORE DI RIDUZIONE A CODOLO - Serie S
REDUCING STANDPIPE COUPLING - S Series

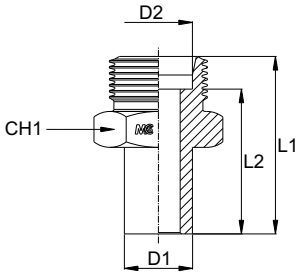

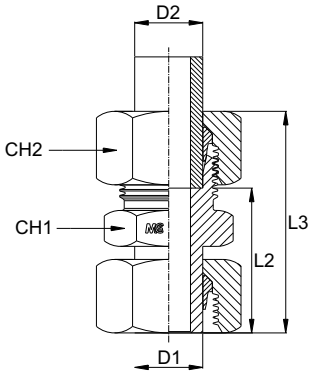

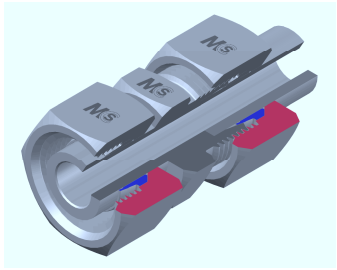

Serie Series	Bar W.P.	Codice (Corpo) Part Number (Body)	Codice (Completo) Part Number (Complete)	D1	D2	L1	L2	L3	CH1	CH2
S	630	EVGE0806SB	EVGE0806S	8	6	36,0	29,0	44,0	14	17
		EVGE1006SB	EVGE1006S	10	6	38,5	31,5	46,5	14	17
		EVGE1206SB	EVGE1206S	12	6	38,0	31,0	46,0	14	17
		EVGE1406SB	EVGE1406S	14	6	42,0	35,0	50,0	17	17
		EVGE1008SB	EVGE1008S	10	8	40,5	33,5	48,5	17	19
		EVGE1208SB	EVGE1208S	12	8	40,0	33,0	48,0	17	19
		EVGE1408SB	EVGE1408S	14	8	42,0	35,0	50,0	17	19
		EVGE1210SB	EVGE1210S	12	10	40,0	32,5	48,5	19	22
		EVGE1410SB	EVGE1410S	14	10	42,0	34,5	50,5	19	22
		EVGE1412SB	EVGE1412S	14	12	44,0	36,5	52,5	22	24
	400	EVGE1606SB	EVGE1606S	16	6	43,0	36,0	51,0	17	17
		EVGE2006SB	EVGE2006S	20	6	48,5	41,5	56,5	22	17
		EVGE2506SB	EVGE2506S	25	6	51,0	44,0	59,0	27	17
		EVGE3006SB	EVGE3006S	30	6	55,5	48,5	63,5	32	17
		EVGE1608SB	EVGE1608S	16	8	43,0	36,0	51,0	17	19
		EVGE2008SB	EVGE2008S	20	8	48,5	41,0	56,5	22	19
		EVGE2508SB	EVGE2508S	25	8	51,0	44,0	59,0	27	19
		EVGE3008SB	EVGE3008S	30	8	55,5	48,5	63,5	32	19
		EVGE1610SB	EVGE1610S	16	10	43,0	35,5	51,5	19	22
		EVGE2010SB	EVGE2010S	20	10	48,5	41,0	57,0	22	22
		EVGE2510SB	EVGE2510S	25	10	51,0	43,5	59,5	27	22
		EVGE1612SB	EVGE1612S	16	12	45,0	37,5	53,5	22	24
		EVGE2012SB	EVGE2012S	20	12	48,5	41,0	57,0	22	24
		EVGE2512SB	EVGE2512S	25	12	51,0	43,5	59,5	27	24
		EVGE3012SB	EVGE3012S	30	12	55,5	48,0	64,0	32	24
		EVGE1614SB	EVGE1614S	16	14	47,0	39,0	57,0	24	27
		EVGE2014SB	EVGE2014S	20	14	50,5	42,5	60,5	24	27
		EVGE2514SB	EVGE2514S	25	14	53,0	45,0	63,0	27	27
		EVGE2016SB	EVGE2016S	20	16	50,5	42,0	60,5	27	30
		EVGE2516SB	EVGE2516S	25	16	53,0	44,5	63,0	27	30
		EVGE3016SB	EVGE3016S	30	16	57,5	49,0	67,5	32	30
		EVGE2520SB	EVGE2520S	25	20	57,0	46,5	68,0	32	36
		EVGE3020SB	EVGE3020S	30	20	59,5	49,0	70,5	32	36
		EVGE3820SB	EVGE3820S	38	20	65,5	55,0	76,5	41	36
		EVGE3025SB	EVGE3025S	30	25	63,5	51,5	75,5	41	46
	315	EVGE3806SB	EVGE3806S	38	6	61,5	54,0	69,5	41	17
		EVGE3808SB	EVGE3808S	38	8	61,5	54,5	69,5	41	19
		EVGE3812SB	EVGE3812S	38	12	61,5	54,0	70,0	41	24
		EVGE3816SB	EVGE3816S	38	16	63,5	55,0	73,5	41	30
		EVGE3825SB	EVGE3825S	38	25	67,5	55,5	79,5	41	46
		EVGE3830SB	EVGE3830S	38	30	69,5	56,0	82,5	46	50
	250	EVGE3010SB	EVGE3010S	30	10	55,5	48,0	64,0	32	22
		EVGE3810SB	EVGE3810S	38	10	61,5	54,0	70,0	41	22
		EVGE3014SB	EVGE3014S	30	14	57,5	49,5	67,5	32	27
		EVGE3814SB	EVGE3814S	38	14	63,5	55,5	73,5	41	27

ADATTATORE MASCHIO DI ESTREMITÀ A SALDARE
WELD ON STRAIGHT MALE COUPLING (WELDING BOSS)

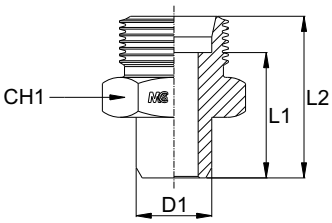

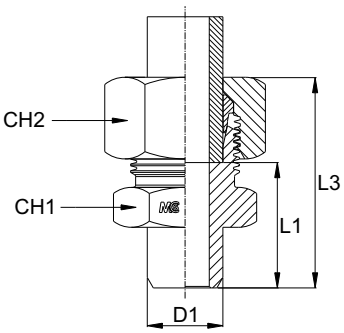

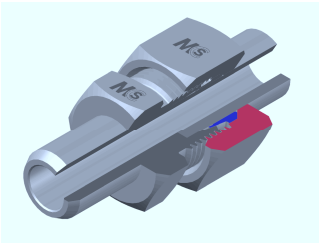

Serie Series	Bar W.P.	Codice (Corpo) Part Number (Body)	Codice (Completo) Part Number (Complete)	Ø Est. Tubo Tube O.D.	D1	L1	L2	L3	CH1	CH2
L	630	WB06LB	WB06L	6	10,0	14,0	21,0	29,0	14	14
		WB08LB	WB08L	8	12,0	16,0	23,0	31,0	14	17
		WB10LB	WB10L	10	14,0	18,0	25,0	33,0	17	19
	450	WB12LB	WB12L	12	16,0	18,0	25,0	33,0	19	22
		WB15LB	WB15L	15	19,0	22,0	29,0	37,0	22	27
		WB18LB	WB18L	18	22,0	23,5	31,0	40,0	27	32
	300	WB22LB	WB22L	22	27,0	28,5	36,0	45,0	32	36
		WB28LB	WB28L	28	32,0	30,5	38,0	47,0	41	41
		WB35LB	WB35L	35	40,0	32,5	43,0	54,0	46	50
		WB42LB	WB42L	42	46,0	35,0	46,0	58,0	55	60
S	900	WB06SB	WB06S	6	11,0	19,0	26,0	34,0	14	17
		WB08SB	WB08S	8	13,0	21,0	28,0	36,0	17	19
	800	WB10SB	WB10S	10	15,0	22,5	30,0	39,0	19	22
	700	WB12SB	WB12S	12	17,0	24,5	32,0	41,0	22	24
		WB14SB	WB14S	14	19,0	27,0	35,0	45,0	24	27
	650	WB16SB	WB16S	16	21,0	26,5	35,0	45,0	27	30
	420	WB20SB	WB20S	20	26,0	29,5	40,0	51,0	32	36
		WB25SB	WB25S	25	31,0	32,0	44,0	56,0	41	46
		WB30SB	WB30S	30	36,0	35,5	49,0	62,0	46	50
		WB38SB	WB38S	38	44,0	38,0	54,0	69,0	55	60

PASSAPARETE A SALDARE
WELD ON BULKHEAD STRAIGHT COUPLING

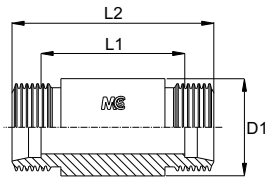

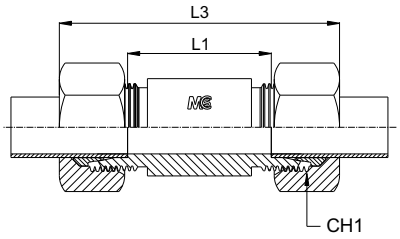

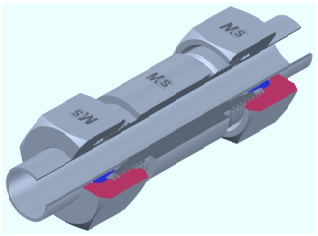

Serie Series	Bar W.P.	Codice (Corpo) Part Number (Body)	Codice (Completo) Part Number (Complete)	Ø Est. Tubo Tube O.D.	D1	L1	L2	L3	CH1
L	630	WBC06LB	WBC06L	6	18,0	56,0	70,0	85,0	14
		WBC08LB	WBC08L	8	20,0	56,0	70,0	85,0	17
		WBC10LB	WBC10L	10	22,0	58,0	72,0	87,0	19
	450	WBC12LB	WBC12L	12	25,0	58,0	72,0	87,0	22
		WBC15LB	WBC15L	15	28,0	70,0	84,0	100,0	27
		WBC18LB	WBC18L	18	32,0	69,0	84,0	101,0	32
	300	WBC22LB	WBC22L	22	36,0	73,0	88,0	105,0	36
		WBC28LB	WBC28L	28	40,0	73,0	88,0	106,0	41
		WBC35LB	WBC35L	35	50,0	71,0	92,0	114,0	50
		WBC42LB	WBC42L	42	60,0	70,0	92,0	115,0	60
S	900	WBC06SB	WBC06S	6	20,0	60,0	74,0	89,0	17
		WBC08SB	WBC08S	8	22,0	60,0	74,0	89,0	19
	800	WBC10SB	WBC10S	10	25,0	59,0	74,0	91,0	22
	700	WBC12SB	WBC12S	12	28,0	59,0	74,0	91,0	24
		WBC14SB	WBC14S	14	30,0	72,0	88,0	107,0	27
	650	WBC16SB	WBC16S	16	35,0	71,0	88,0	107,0	30
	420	WBC20SB	WBC20S	20	38,0	71,0	92,0	114,0	36
		WBC25SB	WBC25S	25	45,0	72,0	96,0	120,0	46
		WBC30SB	WBC30S	30	50,0	73,0	100,0	126,0	50
		WBC38SB	WBC38S	38	60,0	72,0	104,0	133,0	60

CODOLO A SALDARE CON O'RING
WELD ON NIPPLE WITH O'RING

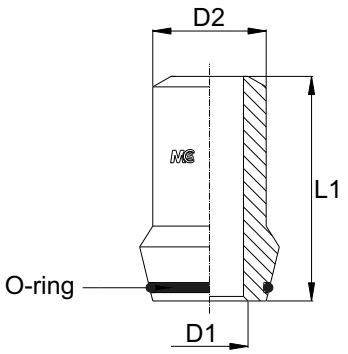

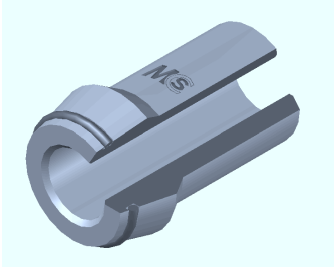

Serie Series	Bar W.P.	Codice Part Number	Spessore Thickness	Ø Est. Tubo Tube O.D.	D1	D2	L1
L/S	630	OSM6175	6x1,75	6	2,5	6,0	31,0
		OSM82	8x2,00	8	4,0	8,0	31,0
		OSM1225	12x2,50	12	7,0	12,0	32,5
	400	OSM102	10x2,00	10	6,0	10,0	32,5
		OSM122	12x2,00	12	8,0	12,0	32,5
	315	OSM1015	10x1,50	10	7,0	10,0	32,5
		OSM1215	12x1,50	12	9,0	12,0	32,5
L	315	OSM1525	15x2,50	15	10,0	15,0	34,0
		OSM1825	18x2,50	18	13,0	18,0	35,5
	160	OSM2225	22x2,50	22	17,0	22,0	38,5
		OSM2825	28x2,50	28	23,0	28,0	41,5
		OSM353	35x3,00	35	29,0	35,0	47,5
		OSM423	42x3,00	42	36,0	42,0	47,5
S	400	OSM143	14x3,00	14	8,0	14,0	38,5
		OSM163	16x3,00	16	10,0	16,0	39,0
		OSM204	20x4,00	20	12,0	20,0	45,0
		OSM255	25x5,00	25	15,0	25,0	49,5
	315	OSM1625	16x2,50	16	11,0	16,0	39,0
		OSM203	20x3,00	20	14,0	20,0	45,0
		OSM254	25x4,00	25	17,0	25,0	49,5
		OSM305	30x5,00	30	20,0	30,0	52,0
		OSM306	30x6,00	30	18,0	30,0	52,0
		OSM386	38x6,00	38	26,0	38,0	56,5
		OSM388	38x8,00	38	22,0	38,0	56,5
	250	OSM162	16x2,00	16	12,0	16,0	39,0
		OSM2025	20x2,50	20	15,0	20,0	45,0
		OSM253	25x3,00	25	19,0	25,0	49,5
		OSM304	30x4,00	30	22,0	30,0	52,0
		OSM385	38x5,00	38	28,0	38,0	56,5
	160	OSM303	30x3,00	30	24,0	30,0	52,0
		OSM383	38x3,00	38	32,0	38,0	56,5

ADATTATORE MASCHIO DI ESTREMITÀ A GOMITO A SALDARE
WELD ON MALE STUD ELBOW

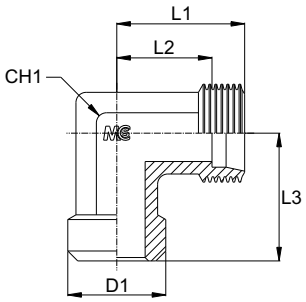

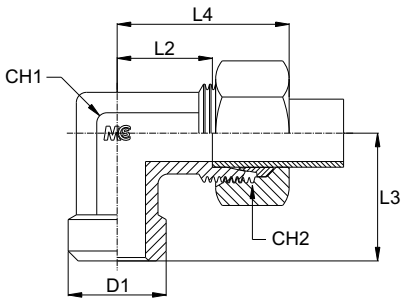

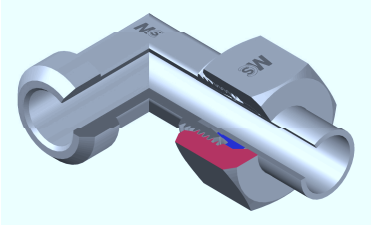

Serie Series	Bar W.P.	Codice (Corpo) Part Number (Body)	Codice (Completo) Part Number (Complete)	Ø Est. Tubo Tube O.D.	D1	L1	L2	L3	L4	CH1	CH2
L	630	WA06LB	WA06L	6	10,0	19,0	12,0	19,0	27,0	12	14
		WA08LB	WA08L	8	12,0	21,0	14,0	21,0	29,0	12	17
		WA10LB	WA10L	10	14,0	22,0	15,0	22,0	30,0	14	19
	450	WA12LB	WA12L	12	16,0	24,0	17,0	24,0	32,0	17	22
		WA15LB	WA15L	15	19,0	28,0	21,0	28,0	36,0	19	27
		WA18LB	WA18L	18	22,0	31,0	23,5	31,0	40,0	24	32
	300	WA22LB	WA22L	22	27,0	35,0	27,5	35,0	44,0	27	36
		WA28LB	WA28L	28	32,0	38,0	30,5	38,0	47,0	36	41
		WA35LB	WA35L	35	40,0	45,0	34,5	45,0	56,0	41	50
		WA42LB	WA42L	42	46,0	51,0	40,0	51,0	63,0	50	60
S	900	WA06SB	WA06S	6	11,0	23,0	16,0	23,0	31,0	12	17
		WA08SB	WA08S	8	13,0	24,0	17,0	24,0	32,0	14	19
	800	WA10SB	WA10S	10	15,0	25,0	17,5	25,0	34,0	17	22
	700	WA12SB	WA12S	12	17,0	29,0	21,5	29,0	38,0	17	24
		WA14SB	WA14S	14	19,0	30,0	22,0	30,0	40,0	19	27
	650	WA16SB	WA16S	16	21,0	33,0	24,5	33,0	43,0	24	30
	420	WA20SB	WA20S	20	26,0	37,0	26,5	37,0	48,0	27	36
		WA25SB	WA25S	25	31,0	42,0	30,0	42,0	54,0	36	46
		WA30SB	WA30S	30	36,0	49,0	35,5	49,0	62,0	41	50
		WA38SB	WA38S	38	44,0	57,0	41,0	57,0	72,0	50	60

TAPPO CON O'RING
PLUG WITH O'RING

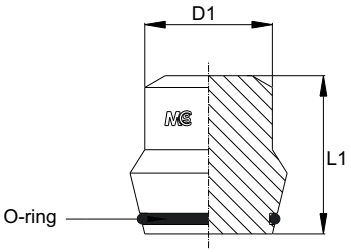

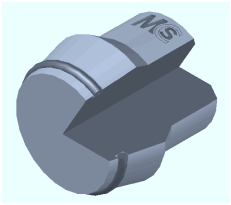

Serie Series	Bar W.P.	Codice Part Number	Ø Est. Tubo Tube O.D.	D1	L1
L	630	TM06L	6	6,0	17,0
		TM08L	8	8,0	17,0
		TM10L	10	10,0	20,0
	450	TM12L	12	12,0	21,0
		TM15L	15	15,0	21,0
		TM18L	18	18,0	23,0
	300	TM22L	22	22,0	23,0
		TM28L	28	28,0	25,0
		TM35L	35	35,0	29,0
		TM42L	42	42,0	30,0
S	900	TM06S	6	6,0	17,0
		TM08S	8	8,0	17,0
	800	TM10S	10	10,0	20,0
	700	TM12S	12	12,0	21,0
		TM14S	14	14,0	23,0
	650	TM16S	16	16,0	24,0
	420	TM20S	20	20,0	28,0
		TM25S	25	25,0	31,0
		TM30S	30	30,0	34,0
		TM38S	38	38,0	38,0

TAPPO MASCHIO ESAGONO INCASSATO CON GUARNIZIONE PIANA

Filetto Gas Cilindrico - Metrico Cilindrico

MALE PLUG INNER HEXAGON AND CAPTIVE SEAL

Thread BSP Parallel - Thread Metric Parallel

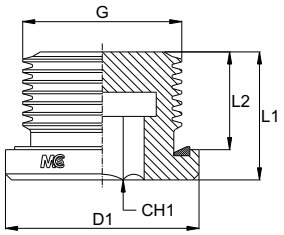

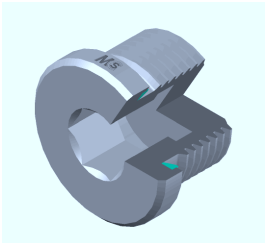

Serie Series	Bar W.P.	Codice Part Number	G	D1	L1	L2	CH1
S	400	BSPMIP02	1/8"	14,0	12,0	8,0	5
		BSPMIP04	1/4"	19,0	17,0	12,0	6
		BSPMIP06	3/8"	22,0	17,0	12,0	8
		BSPMIP08	1/2"	27,0	19,0	14,0	10
		BSPMIP12	3/4"	32,0	21,0	16,0	12
		BSPMIP16	1"	40,0	22,5	16,0	17
	250	BSPMIP20	1,1/4"	50,0	22,5	16,0	22
		BSPMIP24	1,1/2"	55,0	22,5	16,0	24

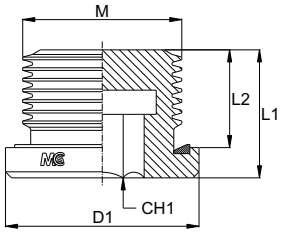

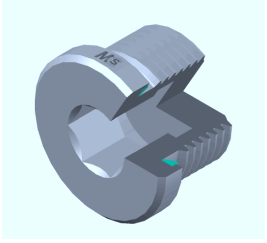

Serie Series	Bar W.P.	Codice Part Number	M	D1	L1	L2	CH1
S	400	MIP101	10x1,0	14,0	12,0	8,0	5
		MIP1215	12x1,5	17,0	17,0	12,0	6
		MIP1415	14x1,5	19,0	17,0	12,0	6
		MIP1615	16x1,5	22,0	17,0	12,0	8
		MIP1815	18x1,5	24,0	17,0	12,0	8
		MIP2015	20x1,5	26,0	19,0	14,0	10
		MIP2215	22x1,5	27,0	19,0	14,0	10
		MIP2615	26x1,5	32,0	21,0	16,0	12
		MIP272	27x2,0	32,0	21,0	16,0	12
		MIP332	33x2,0	40,0	22,5	16,0	17
	250	MIP422	42x2,0	50,0	22,5	16,0	22
		MIP482	48x2,0	55,0	22,5	16,0	24

TAPPO MASCHIO SV. 24°
MALE PLUG 24° CONE

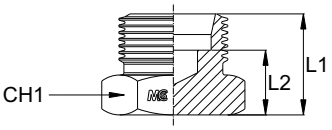

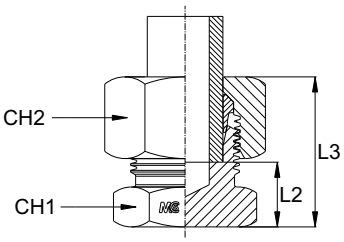

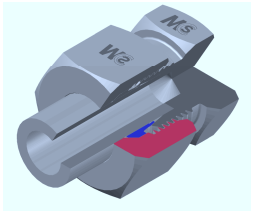

Serie Series	Bar W.P.	Codice (Corpo) Part Number (Body)	Codice (Completo) Part Number (Complete)	Ø Est. Tubo Tube O.D.	L1	L2	L3	CH1	CH2
L	630	MMHP06LB	MMHP06L	6	14,0	7,0	21,5	14	14
		MMHP08LB	MMHP08L	8	15,0	8,0	23,0	14	17
		MMHP10LB	MMHP10L	10	16,0	9,0	24,0	17	19
	450	MMHP12LB	MMHP12L	12	17,0	10,0	24,5	19	22
		MMHP15LB	MMHP15L	15	18,0	11,0	26,0	24	27
		MMHP18LB	MMHP18L	18	19,0	11,5	28,0	27	32
	300	MMHP22LB	MMHP22L	22	21,0	13,5	30,0	32	36
		MMHP28LB	MMHP28L	28	22,0	14,5	31,0	41	41
		MMHP35LB	MMHP35L	35	25,0	14,5	36,0	46	50
		MMHP42LB	MMHP42L	42	27,0	16,0	39,0	55	60
S	900	MMHP06SB	MMHP06S	6	18,0	11,0	26,0	14	17
		MMHP08SB	MMHP08S	8	20,0	13,0	28,0	17	19
	800	MMHP10SB	MMHP10S	10	20,0	12,5	28,5	19	22
	700	MMHP12SB	MMHP12S	12	22,0	14,5	30,5	22	24
		MMHP14SB	MMHP14S	14	24,0	16,0	34,0	24	27
	650	MMHP16SB	MMHP16S	16	24,0	15,5	34,0	27	30
	420	MMHP20SB	MMHP20S	20	28,0	17,5	39,0	32	36
		MMHP25SB	MMHP25S	25	32,0	20,0	44,0	41	46
		MMHP30SB	MMHP30S	30	34,0	20,5	47,0	46	50
		MMHP38SB	MMHP38S	38	39,0	23,0	54,0	55	60

ADATTATORE FEMMINA INTERMEDIO
STRAIGHT FEMALE UNION COUPLING

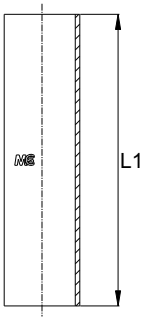

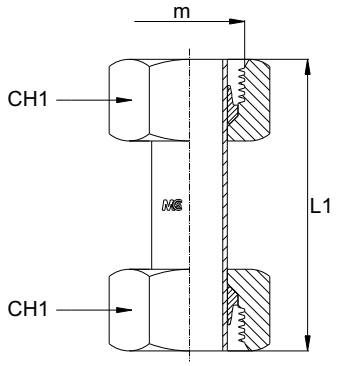

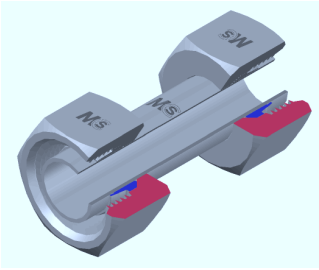

Serie Series	Bar W.P.	Codice (Corpo) Part Number (Body)	Codice (Completo) Part Number (Complete)	Ø Est. Tubo Tube O.D.	m	L1	CH1
L	315	SFUC06LB	SFUC06L	6	12x1,5	40,0	14
		SFUC08LB	SFUC08L	8	14x1,5	40,0	17
		SFUC10LB	SFUC10L	10	16x1,5	42,0	19
		SFUC12LB	SFUC12L	12	18x1,5	42,0	22
		SFUC15LB	SFUC15L	15	22x1,5	42,0	27
		SFUC18LB	SFUC18L	18	26x1,5	45,0	32
	160	SFUC22LB	SFUC22L	22	30x2,0	48,0	36
		SFUC28LB	SFUC28L	28	36x2,0	50,0	41
		SFUC35LB	SFUC35L	35	45x2,0	61,0	50
		SFUC42LB	SFUC42L	42	52x2,0	61,0	60
S	630	SFUC06SB	SFUC06S	6	14x1,5	40,0	17
		SFUC08SB	SFUC08S	8	12x1,5	40,0	19
		SFUC10SB	SFUC10S	10	18x1,5	45,0	22
		SFUC12SB	SFUC12S	12	20x1,5	45,0	24
		SFUC14SB	SFUC14S	14	22x1,5	48,0	27
	400	SFUC16SB	SFUC16S	16	24x1,5	50,0	30
		SFUC20SB	SFUC20S	20	30x2,0	58,0	36
		SFUC25SB	SFUC25S	25	36x2,0	63,0	46
		SFUC30SB	SFUC30S	30	42x2,0	70,0	50
	315	SFUC38SB	SFUC38S	38	52x2,0	78,0	60

CONTRODADO PER ADATTATORE INTERMEDIO PASSAPARETE
LOCKNUT FOR BULCKHEAD STRAIGHT UNION COUPLING

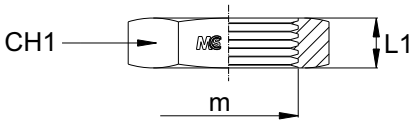

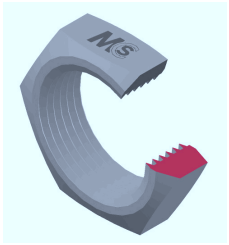

Serie Series	Bar W.P.	Codice Part Number	m	Ø Est. Tubo Tube O.D.	L1	CH1
L/S	-	GM1215	12x1,5	6L	6,0	17
		GM1415	14x1,5	8L-6S	6,0	19
		GM1615	16x1,5	10L-8S	6,0	22
		GM1815	18x1,5	12L-10S	6,0	24
		GM2015	20x1,5	12S	6,0	27
		GM2215	22x1,5	15L-14S	7,0	30
		GM2415	24x1,5	16S	7,0	32
		GM2615	26x1,5	18L	8,0	36
		GM302	30x2,0	22L-20S	8,0	41
		GM362	36x2,0	28L-25S	9,0	46
		GM422	42x2,0	30S	9,0	50
		GM452	45x2,0	35L	9,0	55
		GM522	52x2,0	42L-38S	10,0	65

DIRITTO DI ESTREMITÀ CON DADO GIREVOLE E GUARNIZIONE PIANA
Filetto Gas Cilindrico

MALE STUD COUPLING WITH SWIVEL NUT AND CAPTIVE SEAL
BSP Parallel Thread

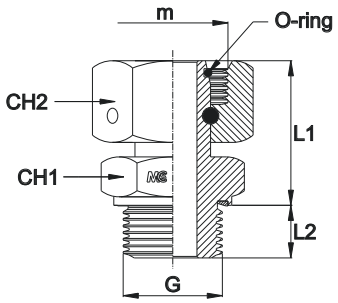

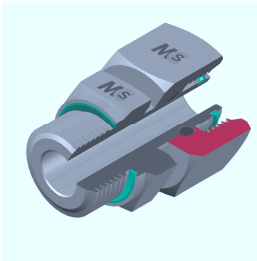

Serie Series	Bar W.P.	Codice (Completo) Part Number (Complete)	Ø Est. Tubo Tube O.D.	m	G	L1	L2	CH1	CH2
L	630	EGE06LG1/8V	6	12x1,5	1/8”	24,0	8,0	14	14
		EGE08LG1/4V	8	14x1,5	1/4”	27,0	12,0	19	17
		EGE10LG1/4V	10	16x1,5	1/4”	25,5	12,0	19	19
	450	EGE12LG3/8V	12	18x1,5	3/8”	32,0	12,0	22	22
		EGE15LG1/2V	15	22x1,5	1/2”	30,0	14,0	27	27
		EGE18LG1/2V	18	26x1,5	1/2”	29,0	14,0	27	32
	300	EGE22LG3/4V	22	30x2,0	3/4”	35,5	16,0	32	36
		EGE28LG1V	28	36x2,0	1”	32,5	18,0	41	41
		EGE35LG11/4V	35	45x2,0	1,1/4”	38,1	20,0	50	50
		EGE42LG11/2V	42	52x2,0	1,1/2”	41,6	22,0	55	60
S	900	EGE06SG1/4V	6	14x1,5	1/4”	24,5	12,0	19	17
		EGE08SG1/4V	8	16x1,5	1/4”	27,0	12,0	19	19
	700	EGE10SG3/8V	10	18x1,5	3/8”	29,5	12,0	22	22
		EGE12SG3/8V	12	20x1,5	3/8”	31,5	12,0	22	24
		EGE14SG1/2V	14	22x1,5	1/2”	33,5	14,0	27	27
	420	EGE16SG1/2V	16	24x1,5	1/2”	33,5	14,0	27	30
		EGE20SG3/4V	20	30x2,0	3/4”	39,0	16,0	32	36
		EGE25SG1V	25	36x2,0	1”	42,5	18,0	41	46
		EGE30SG11/4V	30	42x2,0	1,1/4”	44,1	20,0	50	50
		EGE38SG11/2V	38	52x2,0	1,1/2”	50,5	22,0	55	60

DIRITTO DI ESTREMITÀ CON DADO GIREVOLE E GUARNIZIONE PIANA
Filetto Metrico Cilindrico

MALE STUD COUPLING WITH SWIVEL NUT AND CAPTIVE SEAL
Metric Parallel Thread

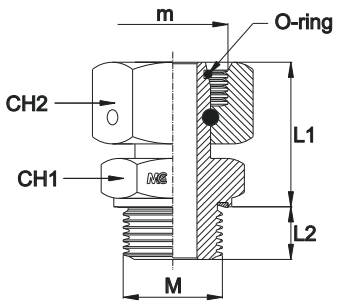

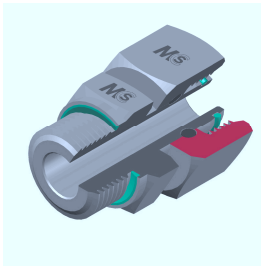

Serie Series	Bar W.P.	Codice (Completo) Part Number (Complete)	Ø Est. Tubo Tube O.D.	m	M	L1	L2	CH1	CH2
L	315	EGE06LM101V	6	12x1,5	10x1,0	24,0	8,0	14	14
		EGE08LM1215V	8	14x1,5	12x1,5	24,5	12,0	17	17
		EGE10LM1415V	10	16x1,5	14x1,5	25,5	12,0	19	19
		EGE12LM1615V	12	18x1,5	16x1,5	28,5	12,0	22	22
		EGE15LM1815V	15	22x1,5	18x1,5	29,5	12,0	24	27
		EGE18LM2215V	18	26x1,5	22x1,5	29,5	14,0	27	32
	160	EGE22LM2615V	22	30x2,0	26x1,5	35,5	16,0	32	36
		EGE28LM332V	28	36x2,0	33x2,0	32,5	18,0	41	41
		EGE35LM422V	35	45x2,0	42x2,0	38,5	20,0	50	50
		EGE42LM482V	42	52x2,0	48x2,0	41,6	22,0	55	60
S	630	EGE06SM1215V	6	14x1,5	12x1,5	24,5	12,0	17	17
		EGE08SM1415V	8	16x1,5	14x1,5	27,0	12,0	19	19
		EGE10SM1615V	10	18x1,5	16x1,5	29,5	12,0	22	22
		EGE12SM1815V	12	20x1,5	18x1,5	31,5	12,0	24	24
		EGE14SM2015V	14	22x1,5	20x1,5	33,5	14,0	27	27
	400	EGE16SM2215V	16	24x1,5	22x1,5	33,5	14,0	27	30
		EGE20SM272V	20	30x2,0	27x2,0	39,0	16,0	32	36
		EGE25SM332V	25	36x2,0	33x2,0	42,5	18,0	41	46
		EGE30SM422V	30	42x2,0	42x2,0	44,5	20,0	50	50
	315	EGE38SM482V	38	52x2,0	48x2,0	50,5	22,0	55	60

DIRITTO DI ESTREMITÀ CON DADO GIREVOLE E O-RING
Filetto UNF/UN-2A

MALE STUD COUPLING WITH SWIVEL NUT AND O-RING
Thread UNF/UN-2A

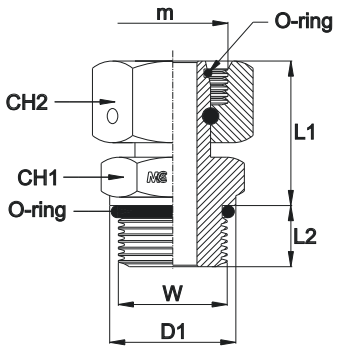

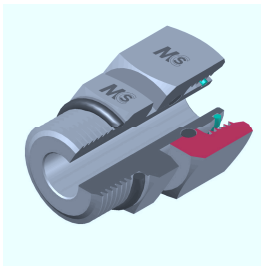

Serie Series	Bar W.P.	Codice (Completo) Part Number (Complete)	Ø Est. Tubo Tube O.D.	m	W	D1	L1	L2	CH1	CH2
L	315	EGE06L7/16UNF	6	12x1,5	7/16"-20	13,8	23,4	9,1	14	14
		EGE08L7/16UNF	8	14x1,5	7/16"-20	13,8	30,0	9,1	14	17
		EGE10L9/16UNF	10	16x1,5	9/16"-18	18,8	27,5	10,0	17	19
		EGE12L3/4UNF	12	18x1,5	3/4"-16	21,8	32,9	11,1	22	22
		EGE15L7/8UNF	15	22x1,5	7/8"-14	26,8	31,2	12,7	27	27
		EGE18L7/8UNF	18	26x1,5	7/8"-14	26,8	30,2	12,7	27	32
	160	EGE22L11/16UNF	22	30x2,0	1,1/16"-12	31,8	35,5	15,1	32	36
		EGE28L15/16UNF	28	36x2,0	1,5/16"-12	40,8	35,3	15,1	41	41
		EGE35L15/8UNF	35	45x2,0	1,5/8"-12	49,8	43,0	15,1	50	50
		EGE42L17/8UNF	42	52x2,0	1,7/8"-12	54,8	48,5	15,1	55	60
S	630	EGE06S7/16UNF	6	14x1,5	7/16"-20	13,8	27,5	9,1	14	17
		EGE08S9/16UNF	8	16x1,5	9/16"-18	18,8	29,0	10,0	17	19
		EGE10S9/16UNF	10	18x1,5	9/16"-18	18,8	31,5	10,0	17	22
		EGE12S3/4UNF	12	20x1,5	3/4"-16	21,8	32,3	11,1	22	24
		EGE14S7/8UNF	14	22x1,5	7/8"-14	26,8	34,8	12,7	27	27
	400	EGE16S7/8UNF	16	24x1,5	7/8"-14	26,8	34,8	12,7	27	30
		EGE20S11/16UNF	20	30x2,0	1,1/16"-12	31,8	39,8	15,1	32	36
		EGE25S15/16UNF	25	36x2,0	1,5/16"-12	40,8	45,3	15,1	41	46
		EGE30S15/8UNF	30	42x2,0	1,5/8"-12	49,8	49,0	15,1	50	50
	315	EGE38S17/8UNF	38	52x2,0	1,7/8"-12	54,8	57,4	15,1	55	60

DIRITTO DI ESTREMITÀ CON DADO GIREVOLE
Filetto NPT

MALE STUD COUPLING WITH SWIVEL NUT
Thread NPT

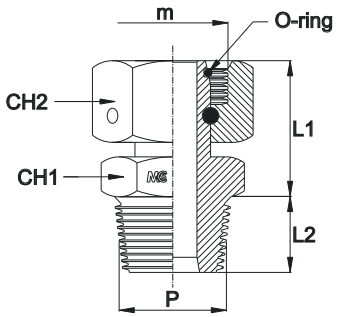

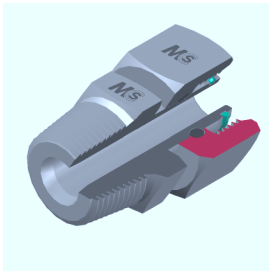

Serie Series	Bar W.P.	Codice (Completo) Part Number (Complete)	Ø Est. Tubo Tube O.D.	m	G	L1	L2	CH1	CH2
L	315	EGE06L1/8NPT	6	12x1,5	1/8”	23,0	10,0	14	14
		EGE08L1/4NPT	8	14x1,5	1/4”	25,0	15,0	14	17
		EGE10L1/4NPT	10	16x1,5	1/4”	23,5	15,0	14	19
		EGE12L3/8NPT	12	18x1,5	3/8”	29,5	15,0	19	22
		EGE15L1/2NPT	15	22x1,5	1/2”	27,0	19,5	22	27
		EGE18L1/2NPT	18	26x1,5	1/2”	26,0	19,5	24	30
	160	EGE22L3/4NPT	22	30x2,0	3/4”	32,5	20,0	27	36
		EGE28L1NPT	28	36x2,0	1”	29,5	25,0	36	41
		EGE35L11/4NPT	35	45x2,0	1,1/4”	35,2	25,5	46	50
		EGE42L11/2NPT	42	52x2,0	1,1/2”	38,6	26,0	50	60
S	630	EGE06S1/4NPT	6	14x1,5	1/4”	23,0	15,0	14	17
		EGE08S1/4NPT	8	16x1,5	1/4”	25,0	15,0	14	19
		EGE10S3/8NPT	10	18x1,5	3/8”	27,0	15,0	19	22
		EGE12S3/8NPT	12	20x1,5	3/8”	29,0	15,0	19	24
		EGE14S1/2NPT	14	22x1,5	1/2”	30,5	19,5	22	27
	400	EGE16S1/2NPT	16	24x1,5	1/2”	30,5	19,5	22	30
		EGE20S3/4NPT	20	30x2,0	3/4”	36,0	20,0	27	36
		EGE25S1NPT	25	36x2,0	1”	39,5	25,0	36	46
		EGE30S11/4NPT	30	42x2,0	1,1/4”	41,2	25,5	46	50
	315	EGE38S11/2NPT	38	52x2,0	1,1/2”	47,5	26,0	50	60

DIRITTO INTERMEDIO CON DADO GIREVOLE
STRAIGHT COUPLING WITH SWIVEL NUT

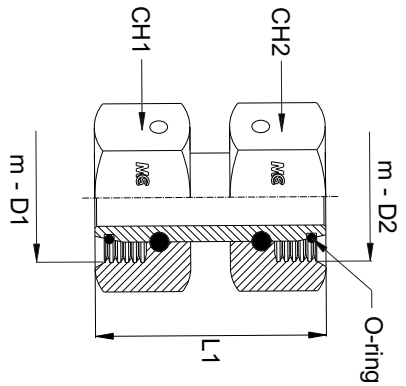

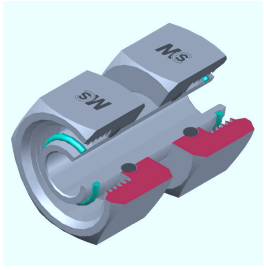

Serie Series	Bar W.P.	Cod. Completo Part N°Complete	Tube O.D. D1	Tube O.D. D2	m D1	m D2	L1	CH1	CH2
L	630	GZ06L	6	6	12x1,5	12x1,5	35	14	14
		GZ08L	8	8	14x1,5	14x1,5	38	17	17
		GZ10L	10	10	16x1,5	16x1,5	38	19	19
	450	GZ12L	12	12	18x1,5	18x1,5	39	22	22
		GZ15L	15	15	22x1,5	22x1,5	45	27	27
		GZ18L	18	18	26x1,5	26x1,5	43	32	32
	300	GZ22L	22	22	30x2	30x2	53	36	36
		GZ28L	28	28	36x2	36x2	47	41	41
		GZ35L	35	35	45x2	45x2	54	50	50
		GZ42L	42	42	52x2	52x2	54	60	60
S	900	GZ06S	6	6	14x1,5	14x1,5	37	17	17
		GZ08S	8	8	16x1,5	16x1,5	37	19	19
	800	GZ10S	10	10	18x1,5	18x1,5	39	22	22
	700	GZ12S	12	12	20x1,5	20x1,5	41	24	24
		GZ14S	14	14	22x1,5	22x1,5	42	27	27
	650	GZ16S	16	16	24x1,5	24x1,5	45	30	30
	420	GZ20S	20	20	30x2	30x2	53	36	36
		GZ25S	25	25	36x2	36x2	59	46	46
		GZ30S	30	30	42x2	42x2	61	50	50
		GZ38S	38	38	52x2	52x2	69	60	60
L	630	GZ0806L	8	6	14x1,5	12x1,5	38	17	14
		GZ1006L	10	6	16x1,5	12x1,5	38	19	14
	450	GZ1206L	12	6	18x1,5	12x1,5	39	22	14
	630	GZ1008L	10	8	16x1,5	14x1,5	38	19	17
	450	GZ1208L	12	8	18x1,5	14x1,5	39	22	17
		GZ1508L	15	8	22x1,5	14x1,5	42	27	17
		GZ1210L	12	10	18x1,5	16x1,5	39	22	19
		GZ1510L	15	10	22x1,5	16x1,5	42	27	19
		GZ1810L	18	10	26x1,5	16x1,5	41	32	19
		GZ1512L	15	12	22x1,5	18x1,5	42	27	22
		GZ1812L	18	12	26x1,5	18x1,5	41	32	22
	300	GZ2212L	22	12	30x2	18x1,5	46	36	22
	450	GZ1815L	18	15	26x1,5	22x1,5	44	32	27
	300	GZ2215L	22	15	30x2	22x1,5	49	36	27
		GZ2815L	28	15	36x2	22x1,5	46	41	27
		GZ2218L	22	18	30x2	26x1,5	48	36	32
		GZ2818L	28	18	36x2	26x1,5	45	41	32
		GZ3518L	35	18	45x2	26x1,5	48,5	50	32
		GZ2822L	28	22	36x2	30x2	50	41	36
		GZ3522L	35	22	45x2	30x2	53,5	50	36
		GZ4222L	42	22	52x2	30x2	53,5	60	36
		GZ3528L	35	28	45x2	36x2	50,5	50	41
		GZ4228L	42	28	52x2	36x2	50,5	60	41
		GZ4235L	42	35	52x2	45x2	54	60	50

GOMITO ORIENTABILE CON DADO GIREVOLE
ADJUSTABLE MALE STUD ELBOW

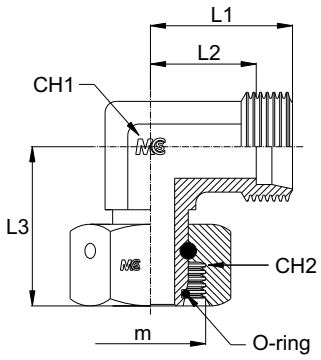

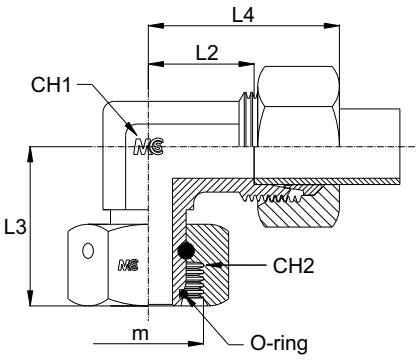

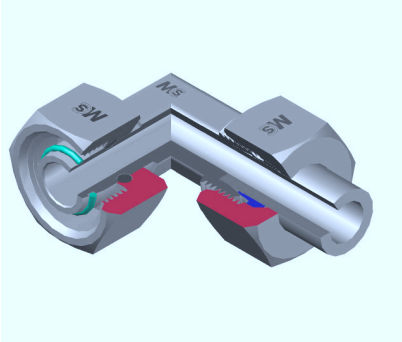

Serie Series	Bar W.P.	Codice (Corpo) Part Number (Body)	Codice (Completo) Part Number (Complete)	Ø Est. Tubo Tube O.D.	m	L1	L2	L3	L4	CH1	CH2
L	630	EW06LB	EW06L	6	12x1,5	19,0	12,0	24,5	27,0	12	14
		EW08LB	EW08L	8	14x1,5	21,0	14,0	26,0	29,0	12	17
		EW10LB	EW10L	10	16x1,5	22,0	15,0	28,0	30,0	14	19
	450	EW12LB	EW12L	12	18x1,5	24,0	17,0	28,5	32,0	17	22
		EW15LB	EW15L	15	22x1,5	28,0	21,0	34,0	36,0	19	27
		EW18LB	EW18L	18	26x1,5	31,0	23,5	36,0	40,0	27	32
	300	EW22LB	EW22L	22	30x2,0	35,0	27,5	40,5	44,0	27	36
		EW28LB	EW28L	28	36x2,0	38,0	30,5	41,5	47,0	36	41
		EW35LB	EW35L	35	45x2,0	45,0	34,5	51,0	56,0	41	50
		EW42LB	EW42L	42	52x2,0	51,0	40,0	52,0	63,0	50	60
S	900	EW06SB	EW06S	6	14x1,5	23,0	16,0	25,0	31,0	12	17
		EW08SB	EW08S	8	16x1,5	24,0	17,0	27,5	32,0	14	19
	800	EW10SB	EW10S	10	18x1,5	25,0	17,5	28,5	34,0	17	22
	700	EW12SB	EW12S	12	20x1,5	29,0	21,5	29,5	38,0	17	24
		EW14SB	EW14S	14	22x1,5	30,0	22,0	34,0	40,0	19	27
	650	EW16SB	EW16S	16	24x1,5	33,0	24,5	35,0	43,0	24	30
	420	EW20SB	EW20S	20	30x2,0	37,0	26,5	41,0	48,0	27	36
		EW25SB	EW25S	25	36x2,0	42,0	30,0	47,5	54,0	36	46
		EW30SB	EW30S	30	42x2,0	49,0	35,5	54,5	62,0	41	50
		EW38SB	EW38S	38	52x2,0	57,0	41,0	54,0	72,0	50	60

"T" LATERALE ORIENTABILE CON DADO GIREVOLE
ADJUSTABLE MALE STUD BARREL TEE

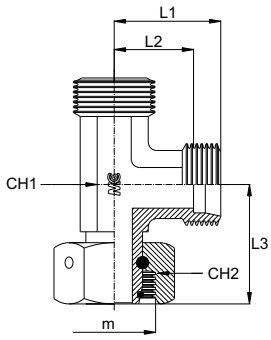

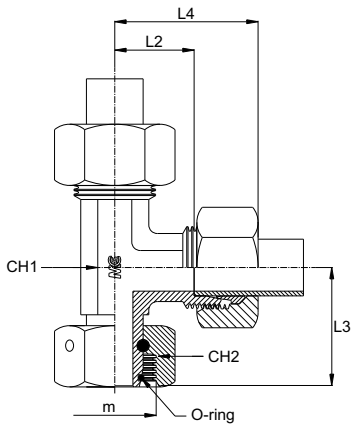

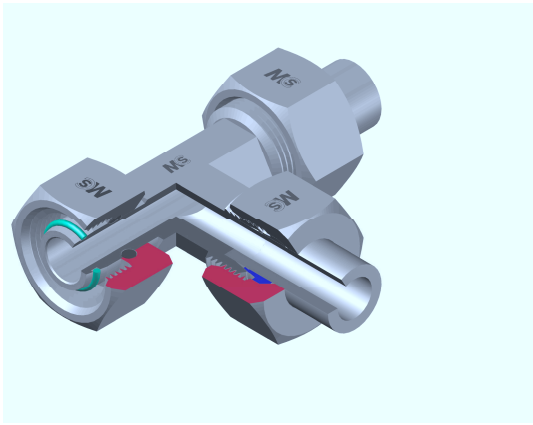

Serie Series	Bar W.P.	Codice (Corpo) Part Number (Body)	Codice (Completo) Part Number (Complete)	Ø Est. Tubo Tube O.D.	m	L1	L2	L3	L4	CH1	CH2
L	630	TLW06LB	TLW06L	6	12x1,5	19,0	12,0	24,5	27,0	12	14
		TLW08LB	TLW08L	8	14x1,5	21,0	14,0	26,0	29,0	12	17
		TLW10LB	TLW10L	10	16x1,5	22,0	15,0	28,0	30,0	14	19
	450	TLW12LB	TLW12L	12	18x1,5	24,0	17,0	28,5	32,0	17	22
		TLW15LB	TLW15L	15	22x1,5	28,0	21,0	34,0	36,0	19	27
		TLW18LB	TLW18L	18	26x1,5	31,0	23,5	36,0	40,0	27	32
	300	TLW22LB	TLW22L	22	30x2,0	35,0	27,5	40,5	44,0	27	36
		TLW28LB	TLW28L	28	36x2,0	38,0	30,5	41,5	47,0	36	41
		TLW35LB	TLW35L	35	45x2,0	45,0	34,5	51,0	56,0	41	50
		TLW42LB	TLW42L	42	52x2,0	51,0	40,0	52,0	63,0	50	60
S	900	TLW06SB	TLW06S	6	14x1,5	23,0	16,0	25,0	31,0	12	17
		TLW08SB	TLW08S	8	16x1,5	24,0	17,0	27,5	32,0	14	19
	800	TLW10SB	TLW10S	10	18x1,5	25,0	17,5	28,5	34,0	17	22
	700	TLW12SB	TLW12S	12	20x1,5	29,0	21,5	29,5	38,0	17	24
		TLW14SB	TLW14S	14	22x1,5	30,0	22,0	34,0	40,0	19	27
	650	TLW16SB	TLW16S	16	24x1,5	33,0	24,5	35,0	43,0	24	30
	420	TLW20SB	TLW20S	20	30x2,0	37,0	26,5	41,0	48,0	27	36
		TLW25SB	TLW25S	25	36x2,0	42,0	30,0	47,5	54,0	36	46
		TLW30SB	TLW30S	30	42x2,0	49,0	35,5	54,5	62,0	41	50
		TLW38SB	TLW38S	38	52x2,0	57,0	41,0	54,0	72,0	50	60

''T'' CENTRALE ORIENTABILE CON DADO GIREVOLE
ADJUSTABLE MALE STUD BRANCH TEE

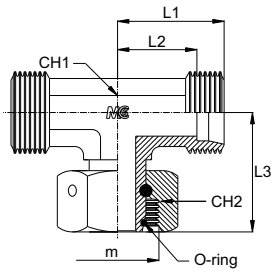

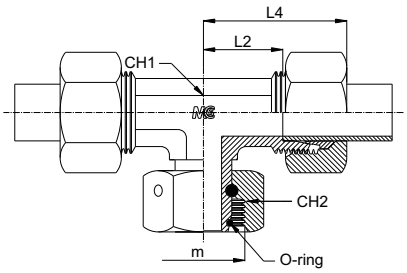

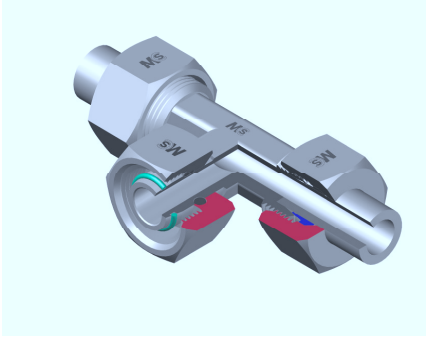

Serie Series	Bar W.P.	Codice (Corpo) Part Number (Body)	Codice (Completo) Part Number (Complete)	Ø Est. Tubo Tube O.D.	m	L1	L2	L3	L4	CH1	CH2
L	630	TCW06LB	TCW06L	6	12x1,5	19,0	12,0	24,5	27,0	12	14
		TCW08LB	TCW08L	8	14x1,5	21,0	14,0	26,0	29,0	12	17
		TCW10LB	TCW10L	10	16x1,5	22,0	15,0	28,0	30,0	14	19
	450	TCW12LB	TCW12L	12	18x1,5	24,0	17,0	28,5	32,0	17	22
		TCW15LB	TCW15L	15	22x1,5	28,0	21,0	34,0	36,0	19	27
		TCW18LB	TCW18L	18	26x1,5	31,0	23,5	36,0	40,0	27	32
	300	TCW22LB	TCW22L	22	30x2,0	35,0	27,5	40,5	44,0	27	36
		TCW28LB	TCW28L	28	36x2,0	38,0	30,5	41,5	47,0	36	41
		TCW35LB	TCW35L	35	45x2,0	45,0	34,5	51,0	56,0	41	50
		TCW42LB	TCW42L	42	52x2,0	51,0	40,0	52,0	63,0	50	60
S	900	TCW06SB	TCW06S	6	14x1,5	23,0	16,0	25,0	31,0	12	17
		TCW08SB	TCW08S	8	16x1,5	24,0	17,0	27,5	32,0	14	19
	800	TCW10SB	TCW10S	10	18x1,5	25,0	17,5	28,5	34,0	17	22
	700	TCW12SB	TCW12S	12	20x1,5	29,0	21,5	29,5	38,0	17	24
		TCW14SB	TCW14S	14	22x1,5	30,0	22,0	34,0	40,0	19	27
	650	TCW16SB	TCW16S	16	24x1,5	33,0	24,5	35,0	43,0	24	30
	420	TCW20SB	TCW20S	20	30x2,0	37,0	26,5	41,0	48,0	27	36
		TCW25SB	TCW25S	25	36x2,0	42,0	30,0	47,5	54,0	36	46
		TCW30SB	TCW30S	30	42x2,0	49,0	35,5	54,5	62,0	41	50
		TCW38SB	TCW38S	38	52x2,0	57,0	41,0	54,0	72,0	50	60

RIDUZIONE A CODOLO CON DADO GIREVOLE - Serie L
REDUCING TUBE ADAPTER WITH SWIVEL NUT - L Series

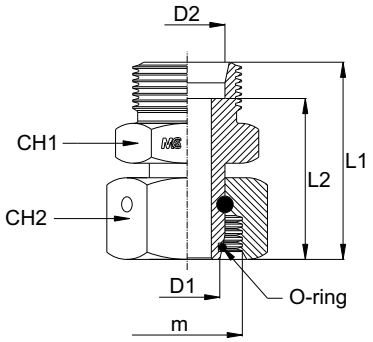

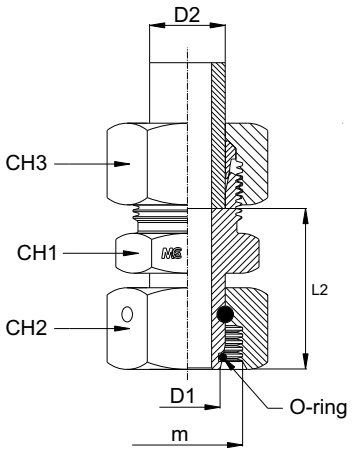

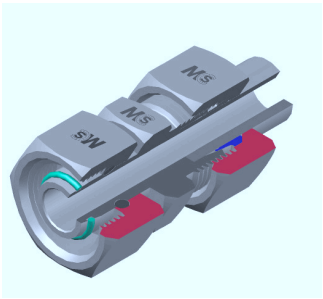

Serie Series	Bar W.P.	Codice (Corpo) Part Number (Body)	Codice (Completo) Part Number (Complete)	D1	D2	m	L1	L2	CH1	CH2	CH3
L	630	RED0806LB	RED0806L	8	6	14x1,5	33,5	26,5	14	17	14
		RED1006LB	RED1006L	10	6	16x1,5	33,5	26,5	14	19	14
	450	RED1206LB	RED1206L	12	6	18x1,5	34,0	27,0	17	22	14
		RED1506LB	RED1506L	15	6	22x1,5	37,0	30,0	19	27	14
		RED1806LB	RED1806L	18	6	26x1,5	37,0	30,0	24	32	14
	630	RED1008LB	RED1008L	10	8	16x1,5	33,5	26,5	14	19	17
	450	RED1208LB	RED1208L	12	8	18x1,5	33,5	26,5	17	22	17
		RED1508LB	RED1508L	15	8	22x1,5	37,0	30,0	19	27	17
		RED1808LB	RED1808L	18	8	26x1,5	37,0	30,0	24	32	17
		RED1210LB	RED1210L	12	10	18x1,5	35,0	28,0	17	22	19
		RED1510LB	RED1510L	15	10	22x1,5	38,0	31,0	19	27	19
		RED1810LB	RED1810L	18	10	26x1,5	38,0	31,0	24	32	19
		RED1512LB	RED1512L	15	12	22x1,5	38,0	31,0	19	27	22
		RED1812LB	RED1812L	18	12	26x1,5	38,0	31,0	24	32	22
		RED1815LB	RED1815L	18	15	26x1,5	39,0	32,0	24	32	27
	300	RED2206LB	RED2206L	22	6	30x2,0	42,0	35,0	27	36	14
		RED2806LB	RED2806L	28	6	36x2,0	40,0	33,0	32	41	14
		RED3506LB	RED3506L	35	6	45x2,0	44,5	37,5	41	50	14
		RED4206LB	RED4206L	42	6	52x2,0	46,5	39,5	50	60	14
		RED2208LB	RED2208L	22	8	30x2,0	42,0	35,0	27	36	17
		RED2808LB	RED2808L	28	8	36x2,0	40,0	33,0	32	41	17
		RED3508LB	RED3508L	35	8	45x2,0	44,5	37,5	41	50	17
		RED4208LB	RED4208L	42	8	52x2,0	46,5	39,5	50	60	17
		RED2210LB	RED2210L	22	10	30x2,0	43,0	36,0	27	36	19
		RED2810LB	RED2810L	28	10	36x2,0	41,0	34,0	32	41	19
		RED3510LB	RED3510L	35	10	45x2,0	45,5	38,5	41	50	19
		RED4210LB	RED4210L	42	10	52x2,0	47,5	40,5	50	60	19
		RED2212LB	RED2212L	22	12	30x2,0	43,0	36,0	27	36	22
		RED2812LB	RED2812L	28	12	36x2,0	41,0	34,0	32	41	22
		RED3512LB	RED3512L	35	12	45x2,0	45,5	38,5	41	50	22
		RED4212LB	RED4212L	42	12	52x2,0	47,5	40,5	50	60	22
		RED2215LB	RED2215L	22	15	30x2,0	44,0	37,0	27	36	27
		RED2815LB	RED2815L	28	15	36x2,0	42,0	35,0	32	41	27
		RED3515LB	RED3515L	35	15	45x2,0	46,5	39,5	41	50	27
		RED4215LB	RED4215L	42	15	52x2,0	48,5	41,5	50	60	27
		RED2218LB	RED2218L	22	18	30x2,0	44,0	36,5	27	36	32
		RED2818LB	RED2818L	28	18	36x2,0	42,0	34,5	32	41	32
		RED3518LB	RED3518L	35	18	45x2,0	46,5	39,0	41	50	32
		RED4218LB	RED4218L	42	18	52x2,0	48,5	41,0	50	60	32
		RED2822LB	RED2822L	28	22	36x2,0	44,0	36,5	32	41	36
		RED3522LB	RED3522L	35	22	45x2,0	48,5	41,0	41	50	36
		RED4222LB	RED4222L	42	22	52x2,0	50,5	43,0	50	60	36
		RED3528LB	RED3528L	35	28	45x2,0	48,5	41,0	41	50	41
		RED4228LB	RED4228L	42	28	52x2,0	50,5	43,0	50	60	41
		RED4235LB	RED4235L	42	35	52x2,0	52,5	42,0	50	60	50

RIDUZIONE A CODOLO CON DADO GIREVOLE - Serie S
REDUCING TUBE ADAPTER WITH SWIVEL NUT - S Series

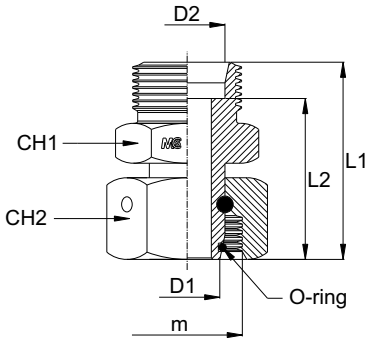

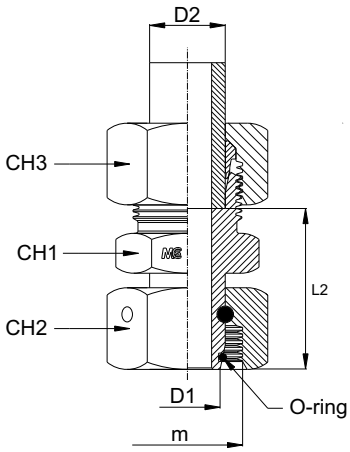

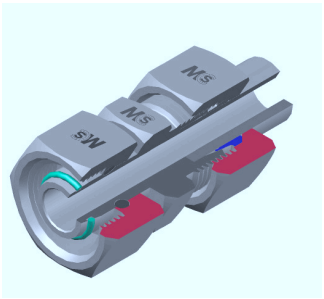

Serie Series	Bar W.P.	Codice (Corpo) Part Number (Body)	Codice (Completo) Part Number (Complete)	D1	D2	m	L1	L2	CH1	CH2	CH3
S	800	RED0806SB	RED0806S	8	6	16x1,5	35,0	28,0	14	19	17
		RED1006SB	RED1006S	10	6	18x1,5	36,0	29,0	17	22	17
	700	RED1206SB	RED1206S	12	6	20x1,5	37,0	30,0	17	24	17
		RED1406SB	RED1406S	14	6	22x1,5	39,5	32,5	19	27	17
		RED1008SB	RED1008S	10	8	18x1,5	38,0	31,0	17	22	19
		RED1208SB	RED1208S	12	8	20x1,5	39,0	32,0	17	24	19
		RED1408SB	RED1408S	14	8	22x1,5	39,5	32,5	19	27	19
		RED1210SB	RED1210S	12	10	20x1,5	39,0	31,5	19	24	22
		RED1410SB	RED1410S	14	10	22x1,5	39,5	32,0	19	27	22
		RED1412SB	RED1412S	14	12	22x1,5	41,5	34,0	22	27	24
	650	RED1606SB	RED1606S	16	6	24x1,5	41,0	34,0	22	30	17
	420	RED2006SB	RED2006S	20	6	30x2,0	45,0	38,0	27	36	17
		RED2506SB	RED2506S	25	6	36x2,0	48,0	41,0	32	46	17
		RED3006SB	RED3006S	30	6	42x2,0	50,0	43,0	41	50	17
	650	RED1608SB	RED1608S	16	8	24x1,5	41,0	34,0	22	30	19
	420	RED2008SB	RED2008S	20	8	30x2,0	45,0	38,0	27	36	19
		RED2508SB	RED2508S	25	8	36x2,0	48,0	41,0	32	46	19
		RED3008SB	RED3008S	30	8	42x2,0	50,0	43,0	41	50	19
	650	RED1610SB	RED1610S	16	10	24x1,5	41,0	33,5	22	30	22
	420	RED2010SB	RED2010S	20	10	30x2,0	45,0	37,5	27	36	22
		RED2510SB	RED2510S	25	10	36x2,0	48,0	40,5	32	46	22
	650	RED1612SB	RED1612S	16	12	24x1,5	43,0	35,5	22	30	24
	420	RED2012SB	RED2012S	20	12	30x2,0	47,0	39,5	27	36	24
		RED2512SB	RED2512S	25	12	36x2,0	50,0	42,5	32	46	24
		RED3012SB	RED3012S	30	12	42x2,0	51,0	43,5	41	50	24
	650	RED1614SB	RED1614S	16	14	24x1,5	45,0	37,0	24	30	27
	420	RED2014SB	RED2014S	20	14	30x2,0	49,0	41,0	27	36	27
		RED2514SB	RED2514S	25	14	36x2,0	52,0	44,0	32	46	27
		RED2016SB	RED2016S	20	16	30x2,0	49,0	40,5	27	36	30
		RED2516SB	RED2516S	25	16	36x2,0	52,0	43,5	32	46	30
		RED3016SB	RED3016S	30	16	42x2,0	53,0	44,5	41	50	30
		RED2520SB	RED2520S	25	20	36x2,0	56,0	45,5	32	46	36
		RED3020SB	RED3020S	30	20	42x2,0	57,0	46,5	41	50	36
		RED3820SB	RED3820S	38	20	52x2,0	66,0	55,5	50	60	36
		RED3025SB	RED3025S	30	25	42x2,0	61,0	49,0	41	50	46
		RED3806SB	RED3806S	38	6	52x2,0	55,0	48,0	50	60	17
		RED3808SB	RED3808S	38	8	52x2,0	55,0	48,0	50	60	19
		RED3812SB	RED3812S	38	12	52x2,0	55,0	47,5	50	60	24
		RED3816SB	RED3816S	38	16	52x2,0	57,0	48,5	50	60	30
		RED3825SB	RED3825S	38	25	52x2,0	65,0	53,0	50	60	46
		RED3830SB	RED3830S	38	30	52x2,0	67,0	53,5	50	60	50
		RED3010SB	RED3010S	30	10	42x2,0	51,0	43,5	41	50	22
		RED3810SB	RED3810S	38	10	52x2,0	55,0	47,5	50	60	22
		RED3014SB	RED3014S	30	14	42x2,0	53,0	45,0	41	50	27
		RED3814SB	RED3814S	38	14	52x2,0	57,0	49,0	50	60	27

ADATTATORE A CODOLO CON DADO GIREVOLE - Serie L/S
TUBE ADAPTER WITH SWIVEL NUT - L/S Series

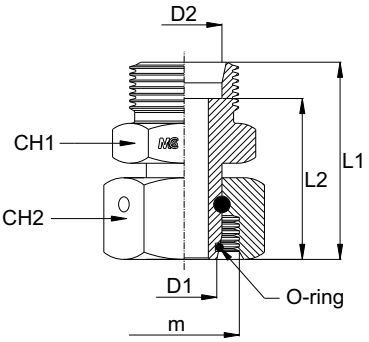

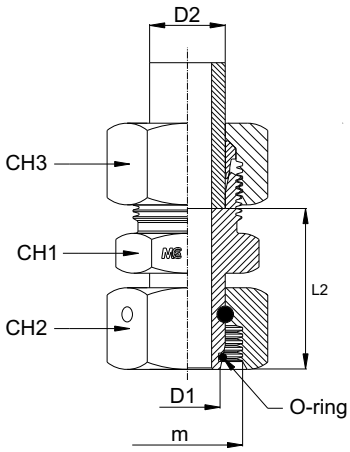

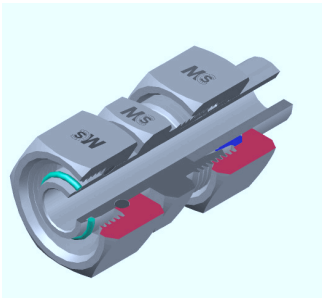

Serie Series	Bar W.P.	Codice (Corpo) Part Number (Body)	Codice (Completo) Part Number (Complete)	Ø Est. Tubo Tube O.D.	m	L1	L2	CH1	CH2	CH3
L	630	EGE06LB	EGE06L	6	12x1,5	31,5	24,5	14	14	14
		EGE08LB	EGE08L	8	14x1,5	33,5	26,5	14	17	17
		EGE10LB	EGE10L	10	16x1,5	36,5	29,5	17	19	19
	450	EGE12LB	EGE12L	12	18x1,5	37,0	30,0	19	22	22
		EGE15LB	EGE15L	15	22x1,5	41,0	34,0	24	27	27
		EGE18LB	EGE18L	18	26x1,5	41,0	33,5	27	32	32
	300	EGE22LB	EGE22L	22	30x2,0	48,5	41,0	32	36	36
		EGE28LB	EGE28L	28	36x2,0	46,0	38,5	41	41	41
		EGE35LB	EGE35L	35	45x2,0	52,5	42,0	46	50	50
		EGE42LB	EGE42L	42	52x2,0	53,5	42,5	55	60	60
S	900	EGE06SB	EGE06S	6	14x1,5	35,0	28,0	14	17	17
		EGE08SB	EGE08S	8	16x1,5	37,0	30,0	17	19	19
	800	EGE10SB	EGE10S	10	18x1,5	38,0	30,5	19	22	22
	700	EGE12SB	EGE12S	12	20x1,5	41,0	33,5	22	24	24
		EGE14SB	EGE14S	14	22x1,5	43,5	35,5	24	27	27
	650	EGE16SB	EGE16S	16	24x1,5	45,0	36,5	27	30	30
	420	EGE20SB	EGE20S	20	30x2,0	53,0	42,5	32	36	36
		EGE25SB	EGE25S	25	36x2,0	60,0	48,0	41	46	46
		EGE30SB	EGE30S	30	42x2,0	63,0	49,5	46	50	50
		EGE38SB	EGE38S	38	52x2,0	72,0	56,0	55	60	60

DIRITTO DI ESTREMITÀ CON DADO GIREVOLE
Filetto Gas Conico

MALE STUD COUPLING WITH SWIVEL NUT
BSP Taper Thread

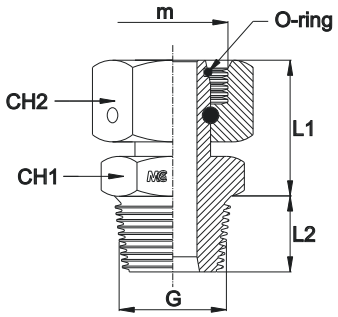

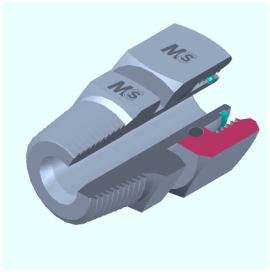

Serie Series	Bar W.P.	Codice (Completo) Part Number (Complete)	Ø Est. Tubo Tube O.D.	m	G	L1	L2	CH1	CH2
L	315	EGE06L1/8BSPT	6	12x1,5	1/8"	22,0	8,0	14	14
		EGE08L1/4BSPT	8	14x1,5	1/4"	23,5	12,0	14	17
		EGE10L1/4BSPT	10	16x1,5	1/4"	23,5	12,0	14	19
		EGE12L3/8BSPT	12	18x1,5	3/8"	24,5	12,0	19	22
		EGE15L1/2BSPT	15	22x1,5	1/2"	27,0	14,0	22	27
		EGE18L1/2BSPT	18	26x1,5	1/2"	27,0	14,0	24	30
	160	EGE22L3/4BSPT	22	30x2,0	3/4"	32,0	16,0	27	36
		EGE28L1BSPT	28	36x2,0	1"	30,0	18,0	36	41
		EGE35L11/4BSPT	35	45x2,0	1,1/4"	34,5	20,0	46	50
		EGE42L11/2BSPT	42	52x2,0	1,1/2"	36,5	22,0	50	60
S	630	EGE06S1/4BSPT	6	14x1,5	1/4"	23,0	12,0	14	17
		EGE08S1/4BSPT	8	16x1,5	1/4"	25,0	12,0	14	19
		EGE10S3/8BSPT	10	18x1,5	3/8"	26,0	12,0	19	22
		EGE12S3/8BSPT	12	20x1,5	3/8"	29,0	12,0	19	24
		EGE14S1/2BSPT	14	22x1,5	1/2"	29,5	14,0	22	27
	400	EGE16S1/2BSPT	16	24x1,5	1/2"	31,0	14,0	22	30
		EGE20S3/4BSPT	20	30x2,0	3/4"	37,0	16,0	27	36
		EGE25S1BSPT	25	36x2,0	1"	42,0	18,0	36	46
		EGE30S11/4BSPT	30	42x2,0	1,1/4"	43,0	20,0	46	50
	315	EGE38S11/2BSPT	38	52x2,0	1,1/2"	50,0	22,0	50	60

GOMITO ORIENTABILE con o'ring e Rondella Speciale

Filetto Gas Cilindrico - Metrico Cilindrico

ADJUSTABLE MALE STUD ELBOW with o'ring and Special Washer

BSP Parallel Thread - Metric Parallel Thread

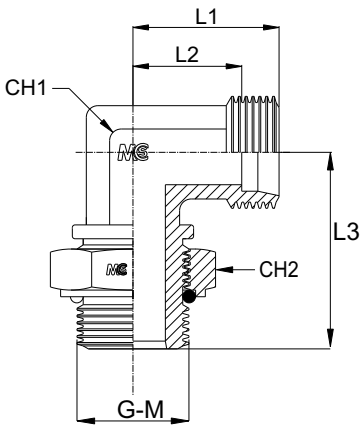

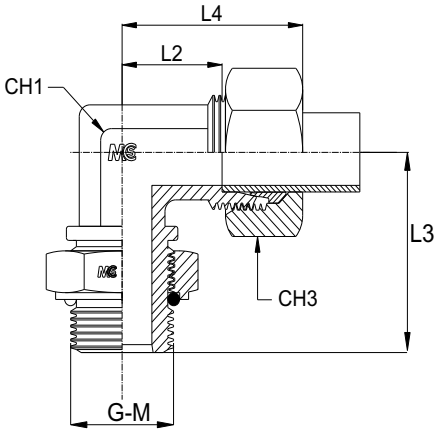

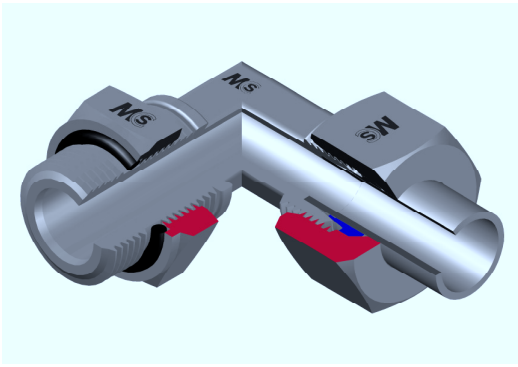

Serie Series	Bar W.P.	Codice (Corpo) Part Number (Body)	Codice (Completo) Part Number (Complete)	Ø Est. Tubo Tube O.D.	m	G	L1	L2	L3	L4	CH1	CH2	CH3
L	315	EW06LG1/8ADJB	EW06LG1/8ADJ	6	12x1,5	1/8"	19,0	12,0	26,0	27,0	12	14	14
		EW08LG1/4ADJB	EW08LG1/4ADJ	8	14x1,5	1/4"	21,0	14,0	32,0	29,0	14	19	17
		EW10LG1/4ADJB	EW10LG1/4ADJ	10	16x1,5	1/4"	22,0	15,0	32,0	30,0	14	19	19
	250	EW12LG3/8ADJB	EW12LG3/8ADJ	12	18x1,5	3/8"	24,0	17,0	37,0	32,0	19	22	22
		EW15LG1/2ADJB	EW15LG1/2ADJ	15	22x1,5	1/2"	28,0	21,0	44,0	36,0	19	27	27
		EW18LG1/2ADJB	EW18LG1/2ADJ	18	26x1,5	1/2"	31,0	23,5	47,0	40,0	24	27	32
	160	EW22LG3/4ADJB	EW22LG3/4ADJ	22	30x2,0	3/4"	35,0	27,5	51,0	44,0	27	36	36
		EW28LG1ADJB	EW28LG1ADJ	28	36x2,0	1"	38,0	30,5	53,0	47,0	33	41	41
		EW35LG11/4ADJB	EW35LG11/4ADJ	35	45x2,0	1"1/4	45,0	34,5	59,0	56,0	41	50	50
		EW42LG11/2ADJB	EW42LG11/2ADJ	42	52x2,0	1"1/2	51,0	40,0	64,0	63,0	48	55	60
S	315	EW06SG1/4ADJB	EW06SG1/4ADJ	6	14x1,5	1/4"	23,0	16,0	32,0	31,0	14	19	17
		EW08SG1/4ADJB	EW08SG1/4ADJ	8	16x1,5	1/4"	24,0	17,0	32,0	32,0	14	19	19
	250	EW10SG3/8ADJB	EW10SG3/8ADJ	10	18x1,5	3/8"	25,0	17,5	37,0	34,0	19	22	22
		EW12SG3/8ADJB	EW12SG3/8ADJ	12	20x1,5	3/8"	29,0	21,5	37,0	38,0	19	22	24
		EW14SG1/2ADJB	EW14SG1/2ADJ	14	22x1,5	1/2"	30,0	22,0	44,0	40,0	22	27	27
		EW16SG1/2ADJB	EW16SG1/2ADJ	16	24x1,5	1/2"	33,0	24,5	47,0	43,0	27	27	30
		EW20SG3/4ADJB	EW20SG3/4ADJ	20	30x2,0	3/4"	37,0	26,5	51,0	48,0	27	36	36
	200	EW25SG1ADJB	EW25SG1ADJ	25	36x2,0	1"	42,0	30,0	53,0	54,0	33	41	46
		EW30SG11/4ADJB	EW30SG11/4ADJ	30	42x2,0	1"1/4	49,0	35,5	59,0	62,0	41	50	50
	200	EW38SG11/2ADJB	EW38SG11/2ADJ	38	52x2,0	1"1/2	57,0	41,0	64,0	72,0	48	55	60

Serie Series	Bar W.P.	Codice (Corpo) Part Number (Body)	Codice (Completo) Part Number (Complete)	Ø Est. Tubo Tube O.D.	m	M	L1	L2	L3	L4	CH1	CH2	CH3
L	315	EW06LM101ADJB	EW06LM101ADJ	6	12x1,5	10x1	19,0	12,0	26,0	27,0	12	14	14
		EW08LM1215ADJB	EW08LM1215ADJ	8	14x1,5	12x1,5	21,0	14,0	31,0	29,0	14	17	17
		EW10LM1415ADJB	EW10LM1415ADJ	10	16x1,5	14x1,5	22,0	15,0	33,0	30,0	14	19	19
		EW12LM1615ADJB	EW12LM1615ADJ	12	18x1,5	16x1,5	24,0	17,0	38,0	32,0	19	22	22
		EW15LM1815ADJB	EW15LM1815ADJ	15	22x1,5	18x1,5	28,0	21,0	40,0	36,0	19	24	27
	250	EW18LM2215ADJB	EW18LM2215ADJ	18	26x1,5	22x1,5	31,0	23,5	46,0	40,0	24	27	32
	160	EW22LM272ADJB	EW22LM272ADJ	22	30x2,0	27x2	35,0	27,5	50,5	44,0	27	32	36
		EW28LM332ADJB	EW28LM332ADJ	28	36x2,0	33x2	38,0	30,5	52,5	47,0	33	41	41
		EW35LM422ADJB	EW35LM422ADJ	35	45x2,0	42x2	45,0	34,5	58,0	56,0	41	50	50
		EW42LM482ADJB	EW42LM482ADJ	42	52x2,0	48x2	51,0	40,0	63,0	63,0	48	55	60
S	315	EW06SM1215ADJB	EW06SM1215ADJ	6	14x1,5	12x1,5	23,0	16,0	31,0	31,0	14	17	17
		EW08SM1415ADJB	EW08SM1415ADJ	8	16x1,5	14x1,5	24,0	17,0	33,0	32,0	14	19	19
		EW10SM1615ADJB	EW10SM1615ADJ	10	18x1,5	16x1,5	25,0	17,5	38,0	34,0	19	22	22
		EW12SM1815ADJB	EW12SM1815ADJ	12	20x1,5	18x1,5	29,0	21,5	38,0	38,0	19	24	24
	250	EW14SM2015ADJB	EW14SM2015ADJ	14	22x1,5	20x1,5	30,0	22,0	44,0	40,0	22	27	27
		EW16SM2215ADJB	EW16SM2215ADJ	16	24x1,5	22x1,5	33,0	24,5	48,0	43,0	27	27	30
		EW20SM272ADJB	EW20SM272ADJ	20	30x2,0	27x2	37,0	26,5	50,5	48,0	27	32	36
	200	EW25SM332ADJB	EW25SM332ADJ	25	36x2,0	33x2	42,0	30,0	52,5	54,0	33	41	46
		EW30SM422ADJB	EW30SM422ADJ	30	42x2,0	42x2	49,0	35,5	58,0	62,0	41	50	50
	160	EW38SM482ADJB	EW38SM482ADJ	38	52x2,0	48x2	57,0	41,0	63,0	72,0	48	55	60

O'RING
O'RING

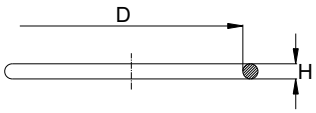

NBR

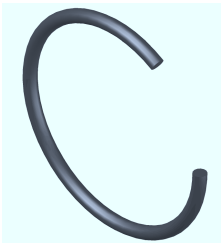

VITON®

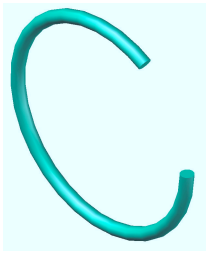

Guarnizione NBR	Guarnizione VITON®	D	H
GOR041	GOR041V	4,00	1,00
GOR0415	GOR0415V	4,00	1,50
GOR061	GOR061V	6,00	1,00
GOR0615	GOR0615V	6,00	1,50
GOR4515	GOR4515V	4,50	1,50
GOR797188	GOR797188V	7,97	1,88
GO081	GO081V	8,00	1,00
GOR8116	GOR8116V	8,10	1,60
GOR892183	GOR892183V	8,92	1,83
GOR0915	GOR0915V	9,00	1,50
GOR9322	GOR9322V	9,30	2,20
GOR101	GOR101V	10,00	1,00
GOR102	GOR102V	10,00	2,00
GOR1052193	GOR1052193V	10,52	1,93
GOR1077262	GOR1077262V	10,77	2,62
GOR11322	GOR11322V	11,30	2,20
GOR119198	GOR119198V	11,90	1,98
GOR121	GOR121V	12,00	1,00
GOR122	GOR122V	12,00	2,00
GOR13322	GOR13322V	13,30	2,20
GOR1394262	GOR1394262V	13,94	2,62
GOR141	GOR141V	14,00	1,00
GOR151	GOR151V	15,00	1,00
GOR152	GOR152V	15,00	2,00
GOR15322	GOR15322V	15,30	2,20
GOR161	GOR161V	16,00	1,00
GOR16324	GOR16324V	16,30	2,40
GOR163622	GOR163622V	16,36	2,20
GOR1786262	GOR1786262V	17,86	2,62
GOR181	GOR181V	18,00	1,00
GOR1918246	GOR1918246V	19,18	2,46
GOR19322	GOR19322V	19,30	2,20
GOR201	GOR201V	20,00	1,00
GOR202	GOR202V	20,00	2,00
GOR20324	GOR20324V	20,30	2,40

Guarnizione NBR	Guarnizione VITON®	D	H
GOR221	GOR221V	22,00	1,00
GOR2347262	GOR2347262V	23,47	2,62
GOR2347295	GOR2347295V	23,47	2,95
GOR236029	GOR236029V	23,60	2,90
GOR251	GOR251V	25,00	1,00
GOR25324	GOR25324V	25,30	2,40
GOR262	GOR262V	26,00	2,00
GOR281	GOR281V	28,00	1,00
GOR29629	GOR29629V	29,60	2,90
GOR2974295	GOR2974295V	29,74	2,95
GOR2974353	GOR2974353V	29,74	3,53
GOR301	GOR301V	30,00	1,00
GOR3225	GOR3225V	32,00	2,50
GOR33324	GOR33324V	33,30	2,40
GOR351	GOR351V	35,00	1,00
GOR37463	GOR37463V	37,46	3,00
GOR3769353	GOR3769353V	37,69	3,53
GOR381	GOR381V	38,00	1,00
GOR3825	GOR3825V	38,00	2,50
GOR38629	GOR38629V	38,60	2,90
GOR421	GOR421V	42,00	1,00
GOR43693	GOR43693V	43,69	3,00
GOR4404353	GOR4404353V	44,04	3,53
GOR44629	GOR44629	44,60	2,90
GOR5556353	GOR5556353V	55,56	3,53
GOR60262	GOR60262V	60,00	2,62
GOR0405	GOR0405V	4,00	0,50
GOR5505	GOR5505V	5,50	0,50
GOR705	GOR705V	7,00	0,50
GOR1005	GOR1005V	10,00	0,50
GOR1305	GOR1305V	13,00	0,50
GOR1605	GOR1605V	16,00	0,50
GOR481	GOR481V	48,00	1,00
GOR17322	GOR17322V	17,30	2,20

NOTE: VITON® è un marchio registrato dalla DuPont Dow Elastomers
NOTE: VITON® is a DuPont Dow Elastomers Trade Mark

GUARNIZIONE PIANA
CAPTIVE SEAL

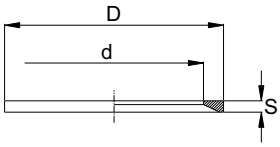

VITON®



Guarnizione VITON®	M	G	D	d	s
GTZ81V	8x1,0	-	9,9	6,5	1,0
GTZ02V	10x1,0	1/8"	11,4	8,4	1,0
GTZ1215V	12x1,5	-	14,9	9,8	1,5
GTZ04V	14x1,5	1/4"	16,5	11,6	1,5
GTZ1615V	16x1,5	-	18,9	13,8	1,5
GTZ06V	-	3/8"	18,9	14,7	1,5
GTZ1815V	18x1,5	-	20,9	15,7	1,5
GTZ2015V	20x1,5	-	22,9	17,8	1,5
GTZ08V	-	1/2"	23,9	18,5	1,5
GTZ2215V	22x1,5	-	24,9	19,6	1,5
GTZ12V	26x1,5 27x2,0	3/4"	29,2	23,9	1,5
GTZ16V	33x2,0	1"	35,7	29,7	2,0
GTZ20V	42x2,0	1,1/4"	45,8	38,8	2,0
GTZ24V	48x2,0	1,1/2"	50,7	44,7	2,0
GTZ32V	-	2"	63,5	56,5	2,0

NOTE: VITON® è un marchio registrato dalla DuPont Dow Elastomers
NOTE: VITON® is a DuPont Dow Elastomers Trade Mark

RONDELLA BONDED AUTOCENTRANTE
AISI 316

SELF CENTERING BONDED
AISI 316

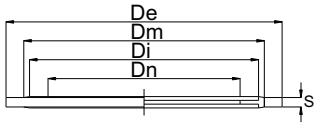

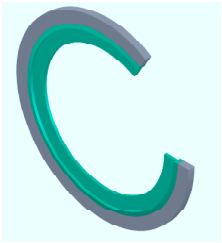

Codice Code	Dn	De mm	Dm mm	Di mm	S mm	Min. B.P. BAR
BSSC02	1/8"	15,88	11,84	10,37	2,03	1480
BSSC04	1/4"	20,57	15,21	13,74	2,03	1540
BSSC06	3/8"	23,8	18,75	17,28	2,03	1230
BSSC08	1/2"	25,58	23,01	21,54	2,50	1120
BSSC10	5/8"	31,58	24,97	23,49	2,50	1240
BSSC12	3/4"	34,93	28,53	27,05	2,50	1050
BSSC16	1"	42,8	36,88	33,89	2,50	780
BSSC20	1,1/4"	52,38	45,93	42,93	2,50	690
BSSC24	1,1/2"	58,6	51,39	48,44	2,50	690
BSSC32	2"	73,03	63,63	60,58	2,50	680

NOTE: VITON® è un marchio registrato dalla DuPont Dow Elastomers
NOTE: VITON® is a DuPont Dow Elastomers Trade Mark