ДОРИНГ АЗИЯ

JOHN DEERE

ФИЛЬТРЫ
КАТАЛОГ







Original equipment manufacturer names and part numbers are quoted for reference purposes only and are not intended to infer that our replacement parts are used as original equipment.

JOHN DEERE 6R 6M SERIES

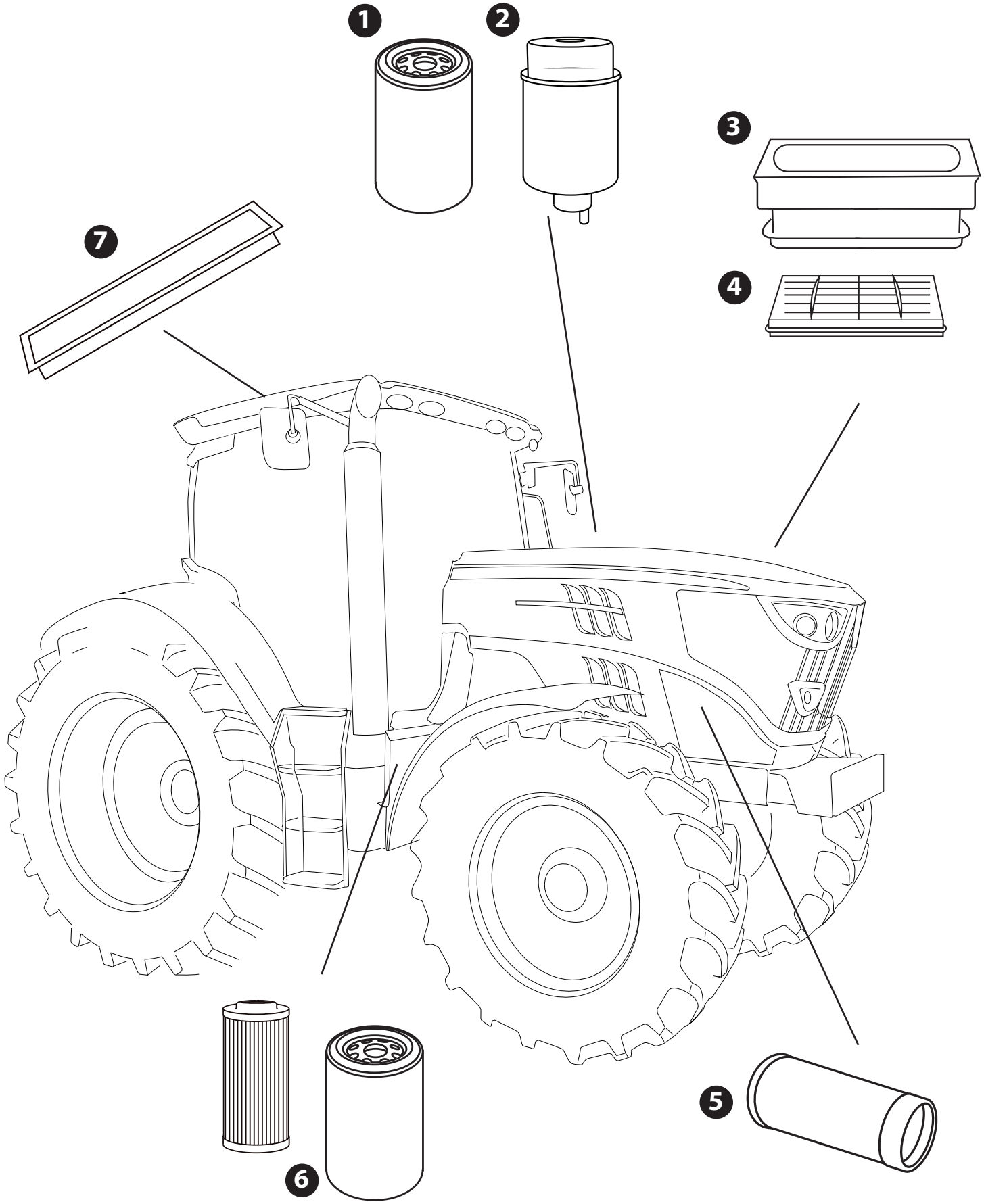

Original equipment manufacturer names and part numbers are quoted for reference purposes only and are not intended to infer that our replacement parts are used as original equipment.

6R SERIES

Ⓡ - Replacement Filter

	1	2	3	4	5	6	7
	Engine	Fuel	Main Air filter	Secondary air	Air Filter	Hydraulic & Transmission	Cab Air
6105R	59983 Ⓡ - 59983R	59642 - Ⓡ - 59642S 58952	58949	58950		3800 Ⓡ - 3800R 59446 (L=255MM) 58945 (L=305MM)	58953 58943
6115R	59983 Ⓡ - 59983R	59642 - Ⓡ - 59642S 58952	58949	58950	58947	3800 Ⓡ - 3800R 59446 (L=255MM) 58945 (L=305MM) 58946 (AUTOPOWER)	58953 58943
6125R	59983 Ⓡ - 59983R	59642 - Ⓡ - 59642S 58952	58949	58950	58947	3800 Ⓡ - 3800R 59446 (L=255MM) 58945 (L=305MM) 58946 (AUTOPOWER)	58953 58943
6130R	59983 Ⓡ - 59983R	59642 - Ⓡ - 59642S 58952	58777	58950	58947	3800 Ⓡ - 3800R 59446 (L=255MM) 58945 (L=305MM) 58946 (AUTOPOWER)	58953 58943
6140R	58778	59640 - Ⓡ - 59640S RE 541925 NP	58777	58950	58947	3800 Ⓡ - 3800R 59446 (L=255MM) 58945 (L=305MM) 58946 (AUTOPOWER)	58953 58943
6150R	58778	59640 - Ⓡ - 59640S RE 541925 NP	58777	58950	58947	3800 Ⓡ - 3800R 59446 (L=255MM) 58945 (L=305MM) 58946 (AUTOPOWER)	58953 58943
6170R	58778	58780	58777	58950	58947	3800 Ⓡ - 3800R 59446 (L=255MM) 58945 (L=305MM) 58946 (AUTOPOWER)	58953 58943
6190R	58778	58780	58777	58950	58947	3800 Ⓡ - 3800R 59446 (L=255MM) 58945 (L=305MM) 58946 (AUTOPOWER)	58953 58943
6210R	58778	58780	58777	58950	58947	3800 Ⓡ - 3800R 59446 (L=255MM) 58945 (L=305MM) 58946 (AUTOPOWER)	58953 58943

6M SERIES

Fit either 59446 or 58945 dependent on pump size

Ⓡ - Replacement Filter

	1	2	3	4	5	6	7
	Engine	Fuel	Main Air filter	Secondary air	Air Filter	Hydraulic & Transmission	Cab Air
6115M	59983 Ⓡ - 59983R	59642 Ⓡ - 59642S 58952	58949	58950	58947	59446 3800 Ⓡ - 3800R	59331 59021
6125M	59983 Ⓡ - 59983R	59642 Ⓡ - 59642S 58952	58949	58950	58947	59446 3800 Ⓡ - 3800R	59331 59021
6130M	59983 Ⓡ - 59983R	59642 Ⓡ - 59642S 58952	58777	58950	58947	59446 3800 Ⓡ - 3800R	59331 59021
6140M	59983 Ⓡ - 59983R	59642 Ⓡ - 59642S 58952	58777	58950	58947	59446 3800 Ⓡ - 3800R	59331 59021
6150M	59983 Ⓡ - 59983R	59642 Ⓡ - 59642S 58952	58777	58950	58947	59446 3800 Ⓡ - 3800R	59331 59021
6170M	59983 Ⓡ - 59983R	59642 Ⓡ - 59642S 58952	58777	58950	58947	59446 3800 Ⓡ - 3800R	59331 59021

Original equipment manufacturer names and part numbers are quoted for reference purposes only and are not intended to infer that our replacement parts are used as original equipment.

JOHN DEERE

7000, 7010, 7030 SERIES

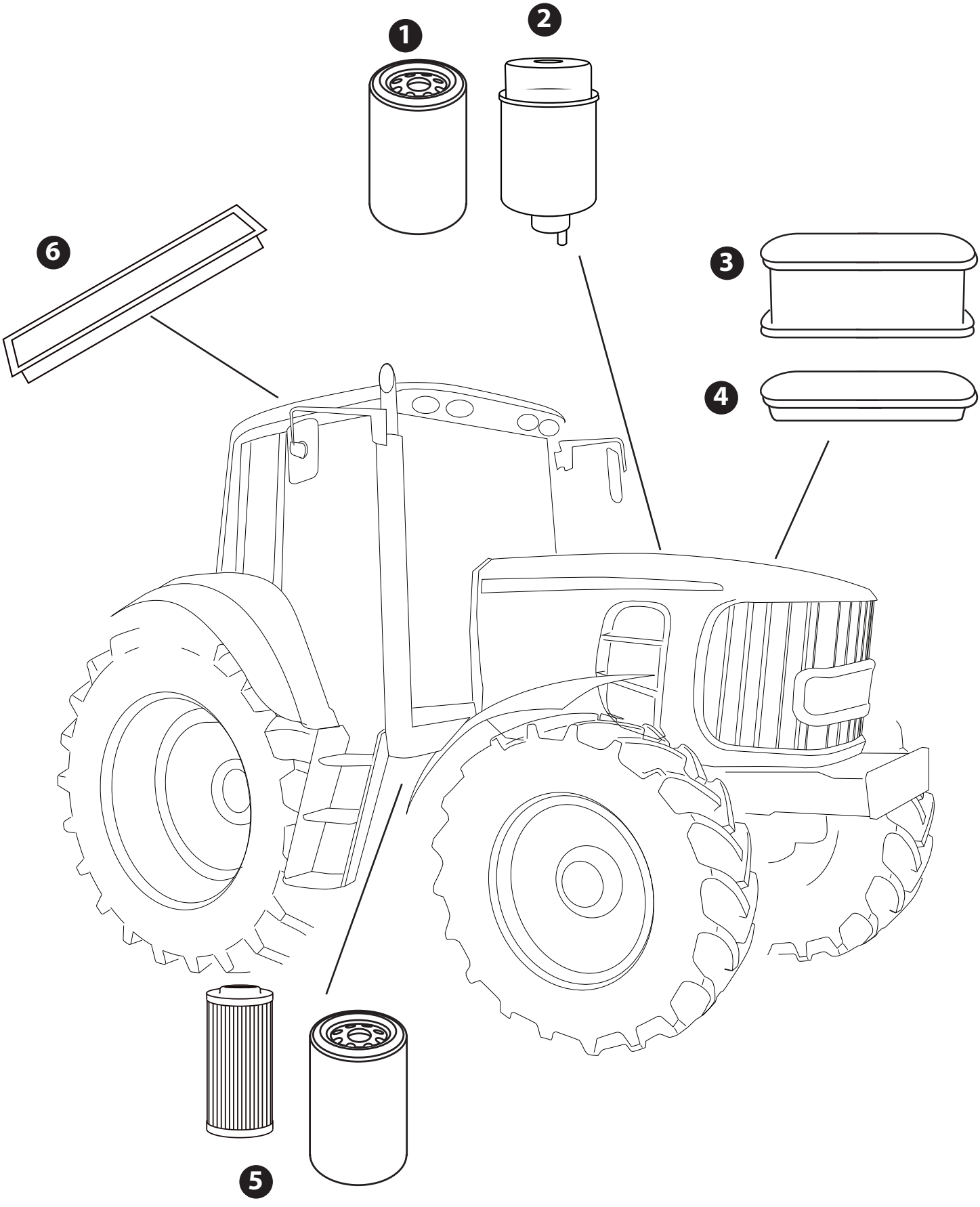

Original equipment manufacturer names and part numbers are quoted for reference purposes only and are not intended to infer that our replacement parts are used as original equipment.

7000 SERIES

Ⓡ - Replacement Filter

	1	2	4	5	6	7
	Engine	Fuel	Outer Air	Inner Air	Hydraulic	Cab Air
7200	1657G - 1657	3797 Ⓡ - 3797S	59925	59884	59990 Ⓡ - 59990R 3800 Ⓡ - 3800R - POWERQUAD	59019
7400	1657G - 1657	3797 Ⓡ - 3797S	59915	59924	59990 Ⓡ - 59990R 3800 Ⓡ - 3800R - POWERQUAD	59019
7600	1657G - 1657	3797 Ⓡ - 3797S	59439	59441G	59990 Ⓡ - 59990R 59666	59019
7700	5044	3797 Ⓡ - 3797S	59438	59440	59990 Ⓡ - 59990R 59666	59019
7800	5044	59668	59438	59440	59990 Ⓡ - 59990R 59666	59019

7010 SERIES

Ⓡ - Replacement Filter

	1	2	3	4	5	
	Engine	Fuel	Outer Air	Inner Air	Hydraulic	Transmission
7210	1453G Ⓡ - 1453	3797 Ⓡ - 3797S	59915	59924	59990 Ⓡ - 59990R 59667 - IVT TRANSMISSION	3800 Ⓡ - 3800R - POWERQUAD
7410	1453G Ⓡ - 1453	3797 Ⓡ - 3797S	59915	59924	59990 Ⓡ - 59990R 59667 - IVT TRANSMISSION	3800 Ⓡ - 3800R - POWERQUAD
7510	1453G Ⓡ - 1453	3797 Ⓡ - 3797S	59915	59924	59990 Ⓡ - 59990R 59667 - IVT TRANSMISSION	3800 Ⓡ - 3800R - POWERQUAD
7610	1453G Ⓡ - 1453	3797 Ⓡ - 3797S	59439	59441G	59990 Ⓡ - 59990R 59667 - IVT TRANSMISSION	59990-59990R 3800 Ⓡ - 3800R
7710	58772	58773	59438	59440	59990 Ⓡ - 59990R 59667 - IVT TRANSMISSION	59990-59990R 3800 Ⓡ - 3800R
7810	58772	58773	59438	59440	59990 Ⓡ - 59990R 59667 - IVT TRANSMISSION	59990-59990R 3800 Ⓡ - 3800R

7030 SERIES

Ⓡ - Replacement Filter

	1	2	2a	3	4	5	6
	Engine	Fuel Primary	Fuel Secondary	Outer Air	Inner Air	Hydraulic	Cab Air
7230	59983 Ⓡ - 59983R	59640	59641	59810	59809	3800 Ⓡ - 3800R 59446	59331 59021
7230 PREMIUM	59983 Ⓡ - 59983R	59640	59641	59810	59809	3800 Ⓡ - 3800R 59446 58946 - IVT TRANSMISSION	59331 59021
7330	59983 Ⓡ - 59983R	59640	59641	59810	59809	3800 Ⓡ - 3800R 59446	59331 59021
7330 PREMIUM	59983 Ⓡ - 59983R	59640	59641	59810	59809	3800 Ⓡ - 3800R 59446 58946 - IVT TRANSMISSION	59331 59021
7430 PREMIUM	59983 Ⓡ - 59983R	59640	59641	59810	59809	3800 Ⓡ - 3800R 59446 58946 - IVT TRANSMISSION	59331 59021
7530 PREMIUM	59983 Ⓡ - 59983R	59640	59641	59810	59809	3800 Ⓡ - 3800R 59446 58946 - IVT TRANSMISSION	59331 59021

Original equipment manufacturer names and part numbers are quoted for reference purposes only and are not intended to infer that our replacement parts are used as original equipment.

JOHN DEERE 6030 SERIES

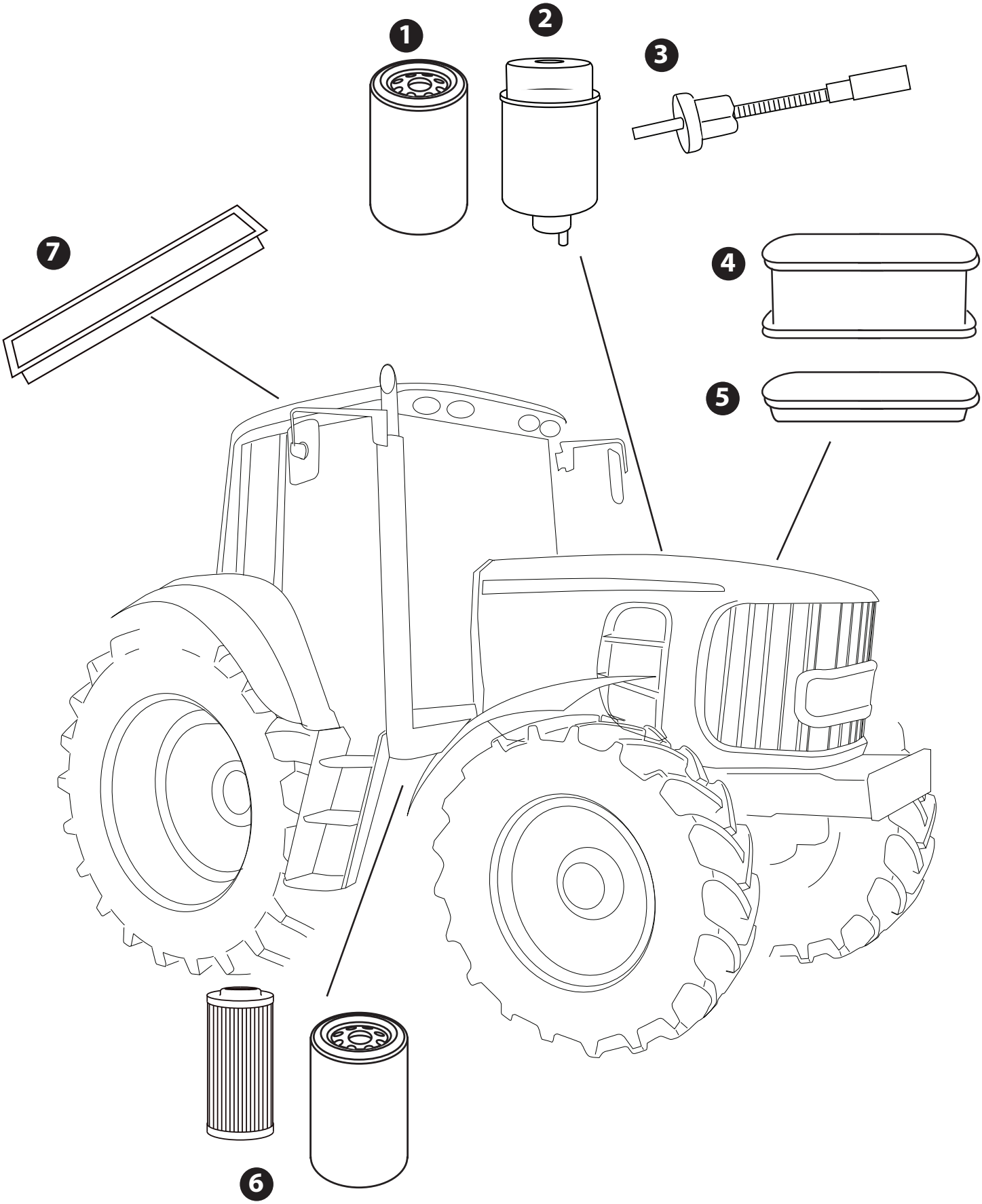

Original equipment manufacturer names and part numbers are quoted for reference purposes only and are not intended to infer that our replacement parts are used as original equipment.

6030 SERIES

Ⓡ - Replacement Filter

	1	2	3	4	5	6	7
	Engine	Fuel	Fuel Sensor	Outer Air	Inner Air	Hydraulic & Transmission	Cab Air
6130	59983 - Ⓡ - 59983R	59643 Ⓡ - 59643S 59642	58913	59817	59809	59446 3800 Ⓡ - 3800R	59331 59021
6230	59983 - Ⓡ - 59983R	59643 Ⓡ - 59643S 59642	58913	59817	59809	59446 3800 Ⓡ - 3800R 58946 (AUTOPOWER)	59331 59021
6330	59983 - Ⓡ - 59983R	59643 Ⓡ - 59643S 59642	58913	59817	59809	59446 3800 Ⓡ - 3800R 58946 (AUTOPOWER)	59331 59021
6430	59983 - Ⓡ - 59983R	59643 Ⓡ - 59643S 59642	58913	59817	59809	59446 3800 Ⓡ - 3800R 58946 (AUTOPOWER)	59331 59021
6530	59983 - Ⓡ - 59983R	59640 Ⓡ - 59640S 59641 Ⓡ - 59641S	58913	59810	59809	59446 3800 Ⓡ - 3800R 58946 (AUTOPOWER)	59331 59021
6630	59983 - Ⓡ - 59983R	59640 Ⓡ - 59640S 59641 Ⓡ - 59641S	58913	59810	59809	59446 3800 Ⓡ - 3800R 58946 (AUTOPOWER)	59331 59021
6830	59983 - Ⓡ - 59983R	59640 Ⓡ - 59640S 59641 Ⓡ - 59641S	58913	59810	59809	59446 3800 Ⓡ - 3800R 58946 (AUTOPOWER)	59331 59021
6930	59983 - Ⓡ - 59983R	59640 Ⓡ - 59640S 59641 Ⓡ - 59641S	58913	59810	59809	59446 3800 Ⓡ - 3800R 58946 (AUTOPOWER)	59331 59021
6930S	59983 - Ⓡ - 59983R	59640 Ⓡ - 59640S 59641 Ⓡ - 59641S	58913	59810	59809	59446 3800 Ⓡ - 3800R 58946 (AUTOPOWER)	59331 59021

Original equipment manufacturer names and part numbers are quoted for reference purposes only and are not intended to infer that our replacement parts are used as original equipment.

JOHN DEERE 6020 SERIES

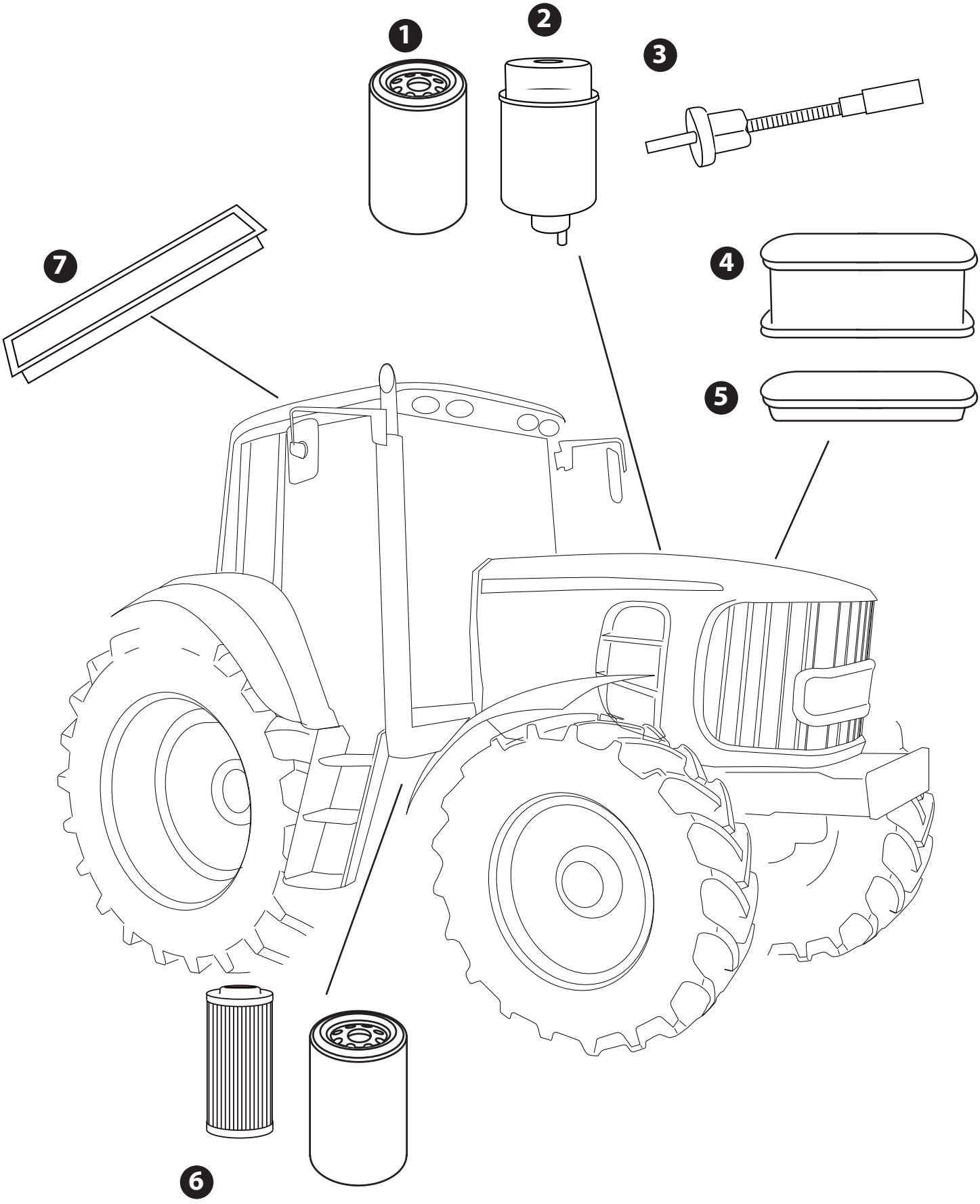

Original equipment manufacturer names and part numbers are quoted for reference purposes only and are not intended to infer that our replacement parts are used as original equipment.

6020 SERIES

Ⓡ - Replacement Filter

	1	2	3	5	4	6	7	Filter Kit Option
	En-gine	Fuel	Fuel Sensor	Outer Air	Inner Air	Hydraulic & Transmission	Cab Air	
6120	59983	3797 Ⓡ - 3797S (A) 59892 Ⓡ - 59892S (B) 59893 Ⓡ - 59893S (B)	58913	59817	59809	59946 (>366729) 59763 Ⓡ - 59763R (366730>) 59990 Ⓡ - 59990R 3800 Ⓡ - 3800R	59344 - Dust 58850 - Pesticide 59021	**59874 - SE 59876 - PREMIUM**
6220	59983	3797 Ⓡ - 3797S (A) 59892 Ⓡ - 59892S (B) 59893 Ⓡ - 59893S (B)	58913	59817	59809	59946 (>366729) 59763 Ⓡ - 59763R (366730>) 59990 Ⓡ - 59990R 3800 Ⓡ - 3800R	59345 - Dust 58850 - Pesticide 59021	**59874 - SE 59876 - PREMIUM**
6320	59983	3797 Ⓡ - 3797S (A) 59892 Ⓡ - 59892S (B) 59893 Ⓡ - 59893S (B)	58913	59817	59809	59946 (>366729) 59763 Ⓡ - 59763R (366730>) 58946 (AUTOPOWER) 59990 Ⓡ - 59990R 3800 Ⓡ - 3800R	59346 - Dust 58850 - Pesticide 59021	**59874 - SE 59876 - PREMIUM**
6420	59983	3797 Ⓡ - 3797S (A) 59892 Ⓡ - 59892S (B) 59893 Ⓡ - 59893S (B)	58913	59817	59809	59946 (>366729) 59763- □ 59763R (366730>) 58946 (AUTOPOWER) 59990 - □ 59990R 3800 - □ 3800R	59347 - Dust 58850 - Pesticide 59021	**59874 - SE 59876 - PREMIUM**
6520	59983	3797 Ⓡ - 3797S (A) 59892 Ⓡ - 59892S (B) 59893 Ⓡ - 59893S (B)	58913	59817	59809	59946 (>366729) 59763 Ⓡ - 59763R (366730>) 58946 (AUTOPOWER) 59990 Ⓡ - 59990R 3800 Ⓡ - 3800R	59348 - Dust 58850 - Pesticide 59021	**59874 - SE 59876 - PREMIUM**
6620	59983	3797 Ⓡ - 3797S (A) 59891 (B) 59890 (B)	58913	59810	59809	59946 (>366729) 59763 Ⓡ - 59763R (366730>) 58946 (AUTOPOWER) 59990 Ⓡ - 59990R 3800 Ⓡ - 3800R	59349 - Dust 58850 - Pesticide 59021	**59875 - SE 59877 - PREMIUM**
6820	59983	3797 Ⓡ - 3797S (A) 59891 (B) 59890 (B)	58913	59810	59809	59990 Ⓡ - 59990R 58946 (AUTOPOWER) 3800 Ⓡ - 3800R	59350 - Dust 58850 - Pesticide 59021	**59875 - SE 59877 - PREMIUM**
6920	59983	3797 Ⓡ - 3797S (A) 59891 (B) 59890 (B)	58913	59810	59809	59990 Ⓡ - 59990R 58946 (AUTOPOWER) 3800 Ⓡ - 3800R	59351 - Dust 58850 - Pesticide 59021	**59875 - SE 59877 - PREMIUM**
6920S	59983	3797 Ⓡ - 3797S (A) 59891 (B) 59890 (B)	58913	59810	59809	59990 Ⓡ - 59990R 58946 (AUTOPOWER) 3800 Ⓡ - 3800R	59352 - Dust 58850 - Pesticide 59021	**59875 - SE 59877 - PREMIUM**

(A) - 1 Filter Model (B) - 2 Filter Model

Original equipment manufacturer names and part numbers are quoted for reference purposes only and are not intended to infer that our replacement parts are used as original equipment.

JOHN DEERE 6000 6010 SERIES

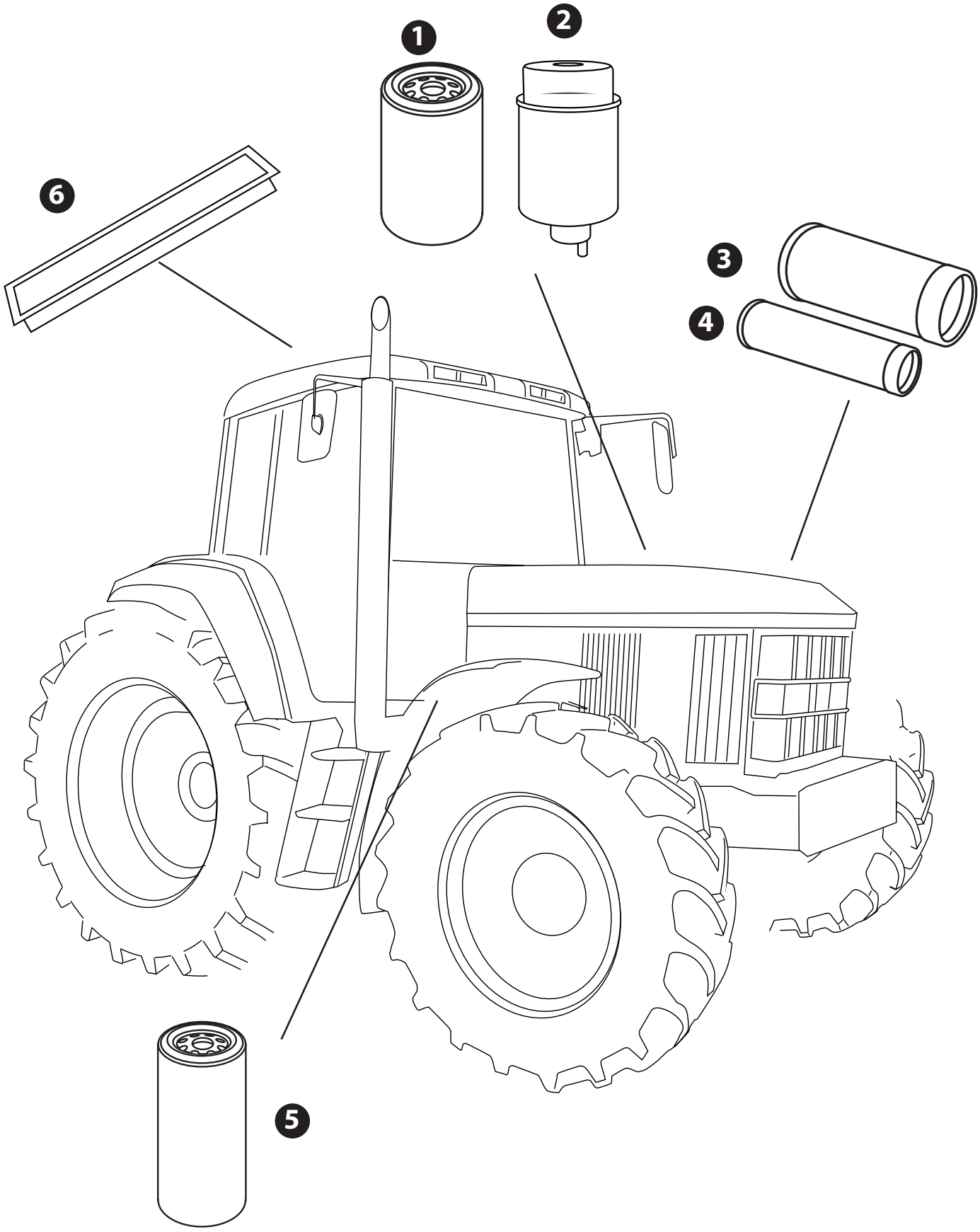

Original equipment manufacturer names and part numbers are quoted for reference purposes only and are not intended to infer that our replacement parts are used as original equipment.

6000 SERIES

Ⓡ - Replacement Filter

	1	2	3	4	5	6	Filter Kit Option
	Engine	Fuel	Outer Air	Inner Air	Hydraulic	Cab Air	
6100	1657G - Ⓡ - 1657	3797 - Ⓡ - 3797S	59925	59884	3800 Ⓡ - 3800R 59990 Ⓡ - 59990R (40cm3 Pump)	59331 - Dust 58850 - Pesticide 59022	**59881**
6200	1657G - Ⓡ - 1657	3797 - Ⓡ - 3797S	59925	59884	3800 Ⓡ - 3800R 59990 Ⓡ - 59990R (40cm3 Pump)	59332 - Dust 58850 - Pesticide 59022	**59881**
6300	1657G - Ⓡ - 1657	3797 - Ⓡ - 3797S	59925	59884	3800 Ⓡ - 3800R 59990 Ⓡ - 59990R (40cm3 Pump)	59333 - Dust 58850 - Pesticide 59022	**59881**
6400	1657G - Ⓡ - 1657	3797 - Ⓡ - 3797S	59925	59884	3800 Ⓡ - 3800R 59990 Ⓡ - 59990R (40cm3 Pump)	59334 - Dust 58850 - Pesticide 59022	**59881**
6600	1657G - Ⓡ - 1657	3797 - Ⓡ - 3797S	59915 KIT - 59121	59924	3800 Ⓡ - 3800R 59990 Ⓡ - 59990R (40cm3 Pump)	59335 - Dust 58850 - Pesticide 59022	**59879**
6800	1657G - Ⓡ - 1657	3797 - Ⓡ - 3797S	59915 KIT - 59121	59924	3800 Ⓡ - 3800R 59990 Ⓡ - 59990R (40cm3 Pump)	59336 - Dust 58850 - Pesticide 59022	**59879**
6900	1657G - Ⓡ - 1657	3797 - Ⓡ - 3797S	59915 KIT - 59121	59924	3800 Ⓡ - 3800R 59990 Ⓡ - 59990R (40cm3 Pump)	59337 - Dust 58850 - Pesticide 59022	**59879**

6010 SERIES

Ⓡ - Replacement Filter

	1	2	3	4	5	6	Filter Kit Option
	Engine	Fuel	Outer Air	Inner Air	Hydraulic & Transmission	Cab Air	
6110	1453G - Ⓡ - 1453	3797- Ⓡ - 3797S	59884	59925	3800 Ⓡ - 3800R 59990 (40cm3 Pump)	59337 - Dust 58850 - Pesticide 59022	**59880**
6210	1453G - Ⓡ - 1453	3797- Ⓡ - 3797S	59884	59925	3800 Ⓡ - 3800R 59990 (40cm3 Pump) 59691 (AUTOPOWER)	59338 - Dust 58850 - Pesticide 59022	**59880**
6310	1453G - Ⓡ - 1453	3797- Ⓡ - 3797S	59884	59925	3800 Ⓡ - 3800R 59990 (40cm3 Pump) 59691 (AUTOPOWER)	59339 - Dust 58850 - Pesticide 59022	**59880**
6410	1453G - Ⓡ - 1453	3797- Ⓡ - 3797S	59884	59925	3800 Ⓡ - 3800R 59990 (40cm3 Pump) 59691 (AUTOPOWER)	59340 - Dust 58850 - Pesticide 59022	**59880**
6610	1453G - Ⓡ - 1453	3797- Ⓡ - 3797S	59924	59915	3800 Ⓡ - 3800R 59990 (40cm3 Pump) 59691 (AUTOPOWER)	59341 - Dust 58850 - Pesticide 59022	**59878**
6810	1453G - Ⓡ - 1453	3797- Ⓡ - 3797S	59924	59915	3800 Ⓡ - 3800R 59990 (40cm3 Pump) 59691 (AUTOPOWER)	59342 - Dust 58850 - Pesticide 59022	**59878**
6910	1453G - Ⓡ - 1453	3797- Ⓡ - 3797S	59924	59915	3800 Ⓡ - 3800R 59990 (40cm3 Pump) 59691 (AUTOPOWER)	59343 - Dust 58850 - Pesticide 59022	**59878**
6910S	1453G - Ⓡ - 1453	3797- Ⓡ - 3797S	59924	59915	3800 Ⓡ - 3800R 59990 (40cm3 Pump) 59691 (AUTOPOWER)	59344 - Dust 58850 - Pesticide 59022	**59878**

Original equipment manufacturer names and part numbers are quoted for reference purposes only and are not intended to infer that our replacement parts are used as original equipment.

JOHN DEERE 40 50 55 SERIES

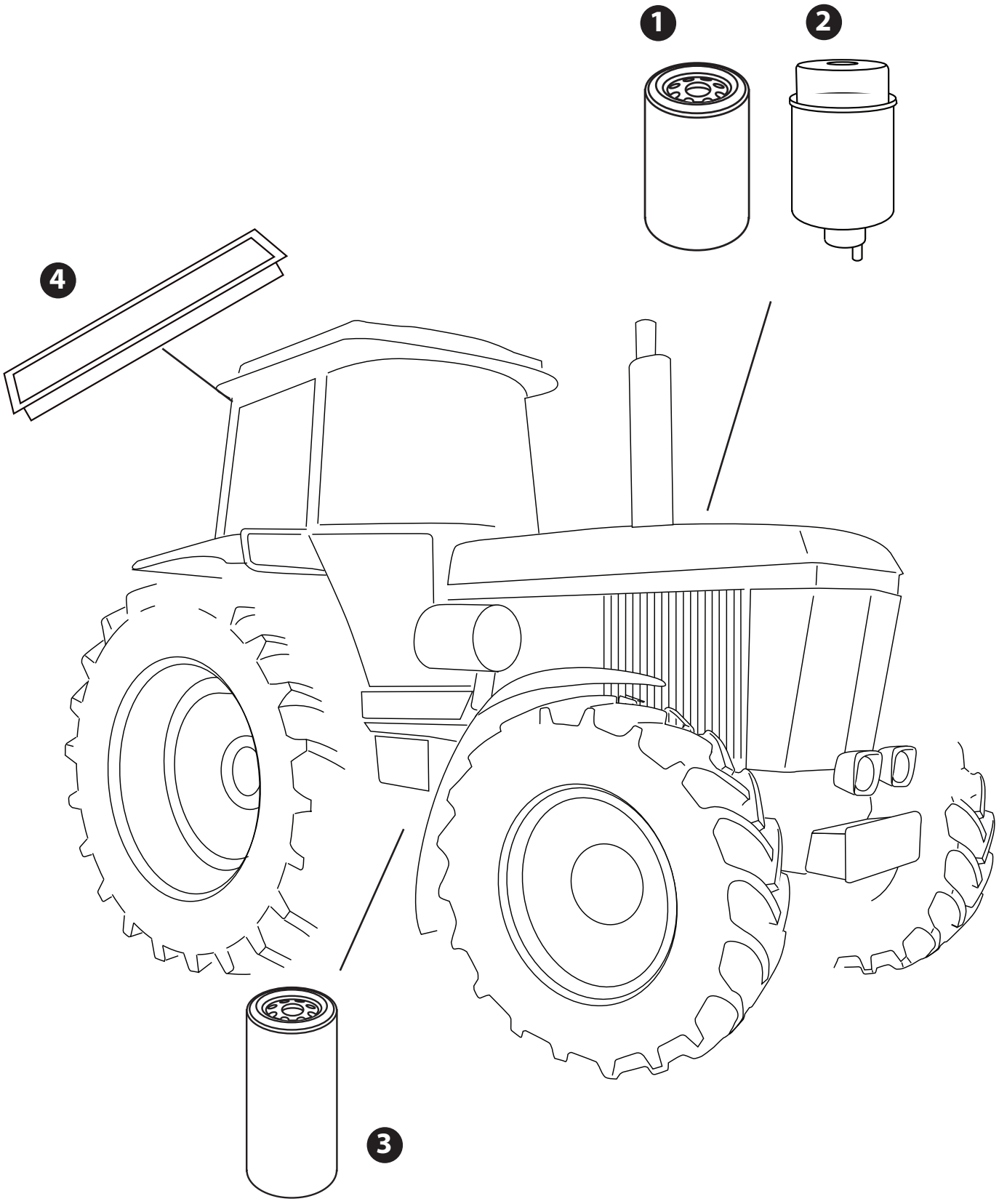

Original equipment manufacturer names and part numbers are quoted for reference purposes only and are not intended to infer that our replacement parts are used as original equipment.

40 SERIES

	1	2	5	6
	Engine	Fuel	Hydraulic	Cab Air
4040		3527S	59302	59020 - WITHOUT ROOF HATCH, 58887 - WITH ROOF HATCH
4240		3527S	59302	59020 - WITHOUT ROOF HATCH, 58887 - WITH ROOF HATCH
4440		3527S	59302	59020 - WITHOUT ROOF HATCH, 58887 - WITH ROOF HATCH
4640		3527S	59302	59020 - WITHOUT ROOF HATCH, 58887 - WITH ROOF HATCH
4840		3527S	59302	59020 - WITHOUT ROOF HATCH, 58887 - WITH ROOF HATCH

50 SERIES

	1	2	5	6
	Engine	Fuel	Hydraulic	Cab Air
4050	5044 - 6566 ENGINE 1657G - 6359 ENGINE	3527S - 1 filter type 59668 - 2 filter type	59302	59020 - WITHOUT ROOF HATCH, 58887 - WITH ROOF HATCH
4250	5044	59688	59302	59020 - WITHOUT ROOF HATCH, 58887 - WITH ROOF HATCH
4450	5044	59688	59302	59020 - WITHOUT ROOF HATCH, 58887 - WITH ROOF HATCH
4650	5044	59688	59302	59020 - WITHOUT ROOF HATCH, 58887 - WITH ROOF HATCH
4850	5044	59688	59302	59020 - W/O SUNROOF, 58887 - C/W SUNROOF

55 SERIES

	1	2	5	6
	Engine	Fuel	Hydraulic	Cab Air
4055	5044	59668	59302	59020 - WITHOUT ROOF HATCH, 58887 - WITH ROOF HATCH
4255	5044	59668	59302	59020 - WITHOUT ROOF HATCH, 58887 - WITH ROOF HATCH
4455	5044	59668	59302	59020 - WITHOUT ROOF HATCH, 58887 - WITH ROOF HATCH
4555	5044	59668	59302	59020 - WITHOUT ROOF HATCH, 58887 - WITH ROOF HATCH
4755	5044	59668	59302	59020 - WITHOUT ROOF HATCH, 58887 - WITH ROOF HATCH
4955	5044	59668	59302	59020 - WITHOUT ROOF HATCH, 58887 - WITH ROOF HATCH

Original equipment manufacturer names and part numbers are quoted for reference purposes only and are not intended to infer that our replacement parts are used as original equipment.

ДОРИНГ АЗИЯ

www.doring.kz

"ДОРИНГ АЗИЯ" ТОО

Республика Казахстан,
010000,
г. Астана, трасса
АСТАНА-КАРАГАНДА,
здание 1.

Часы работы
Понедельник - Пятница
09:00 - 20:00

Email
info@doring.kz
Телефон
+7 (700)637-1000

Original equipment manufacturer names and part numbers are quoted for reference purposes only and are not intended to infer that our replacement parts are used as original equipment.