RYSSBY
2014

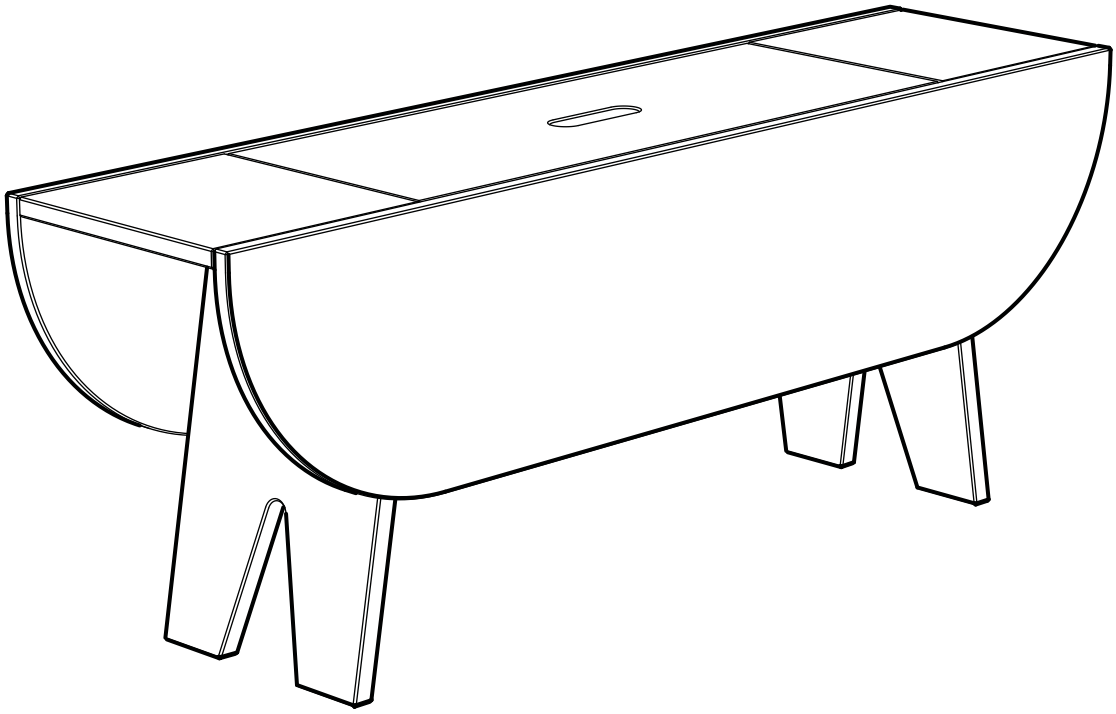

Design and Quality
IKEA of Sweden

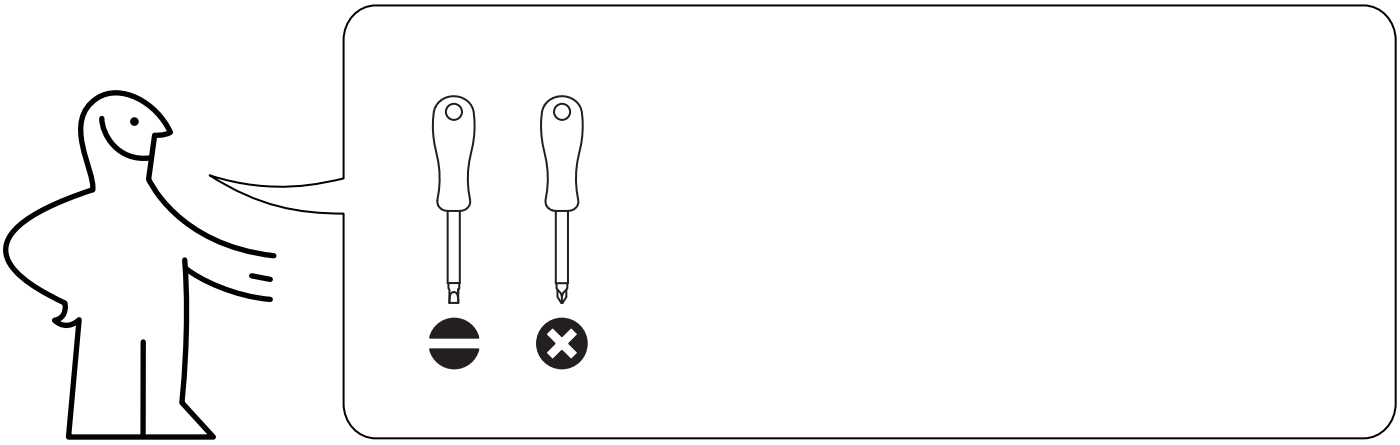

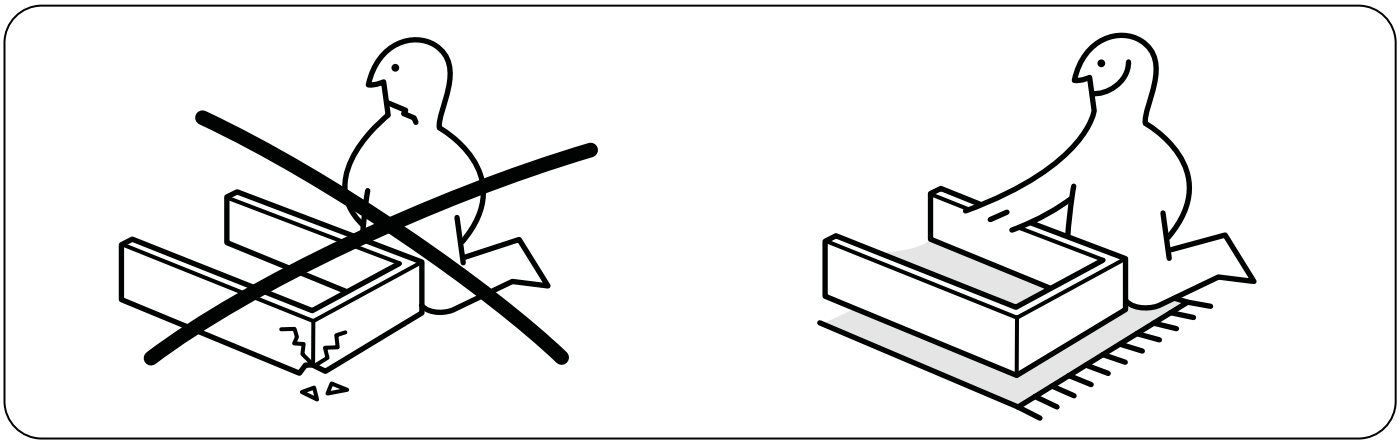

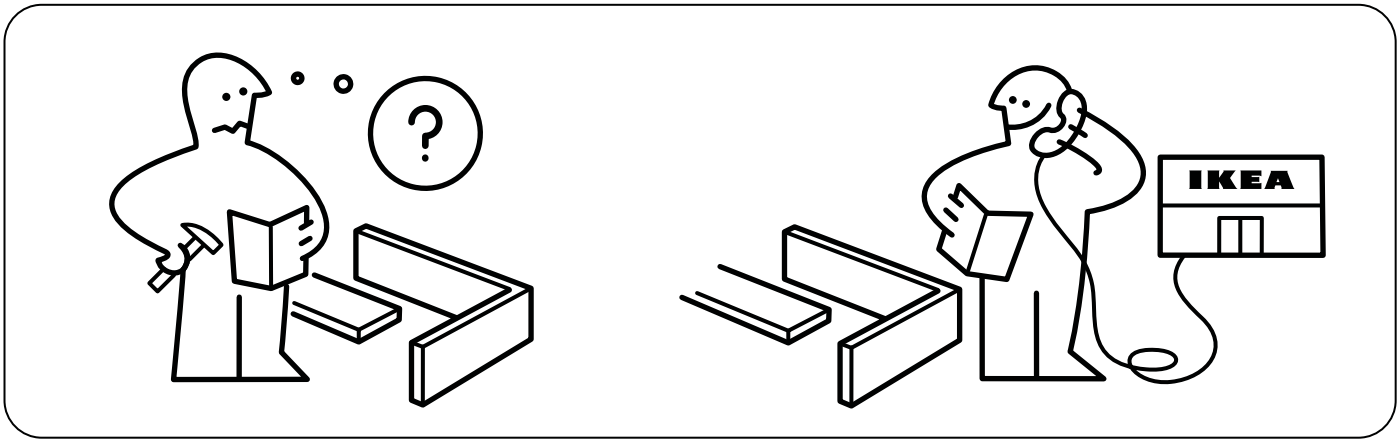
?
IKEA

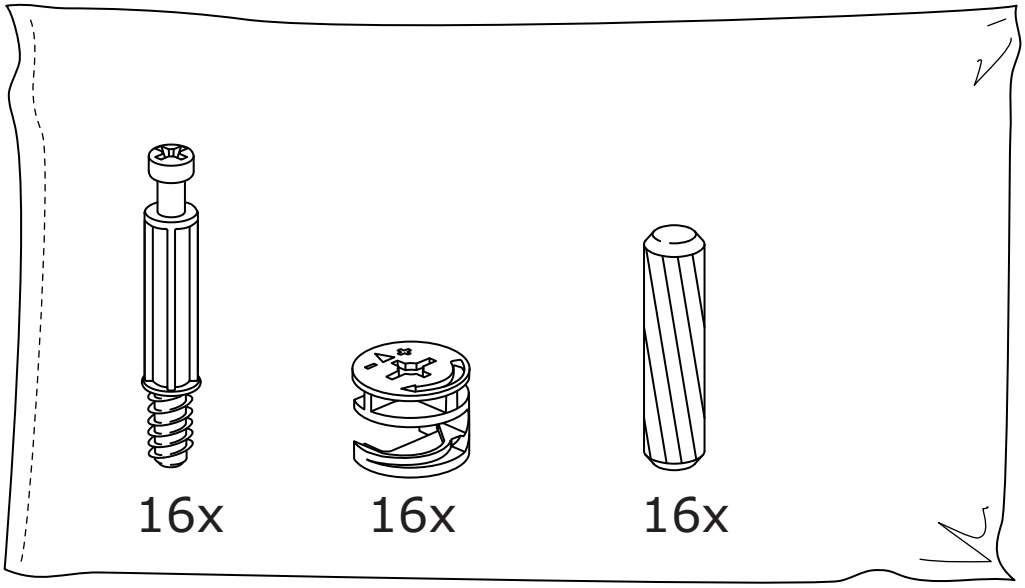
16x
16x
16x

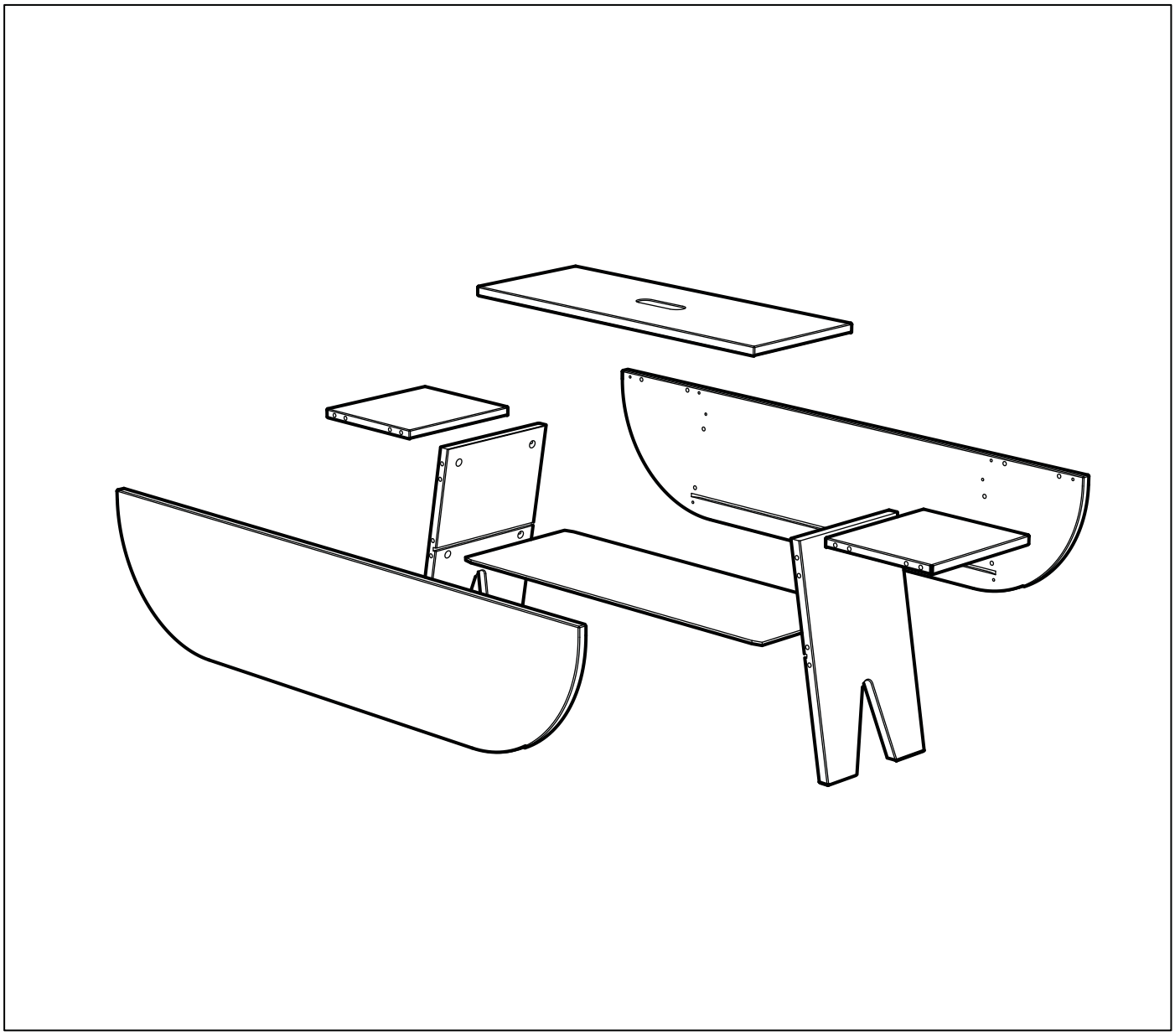

1

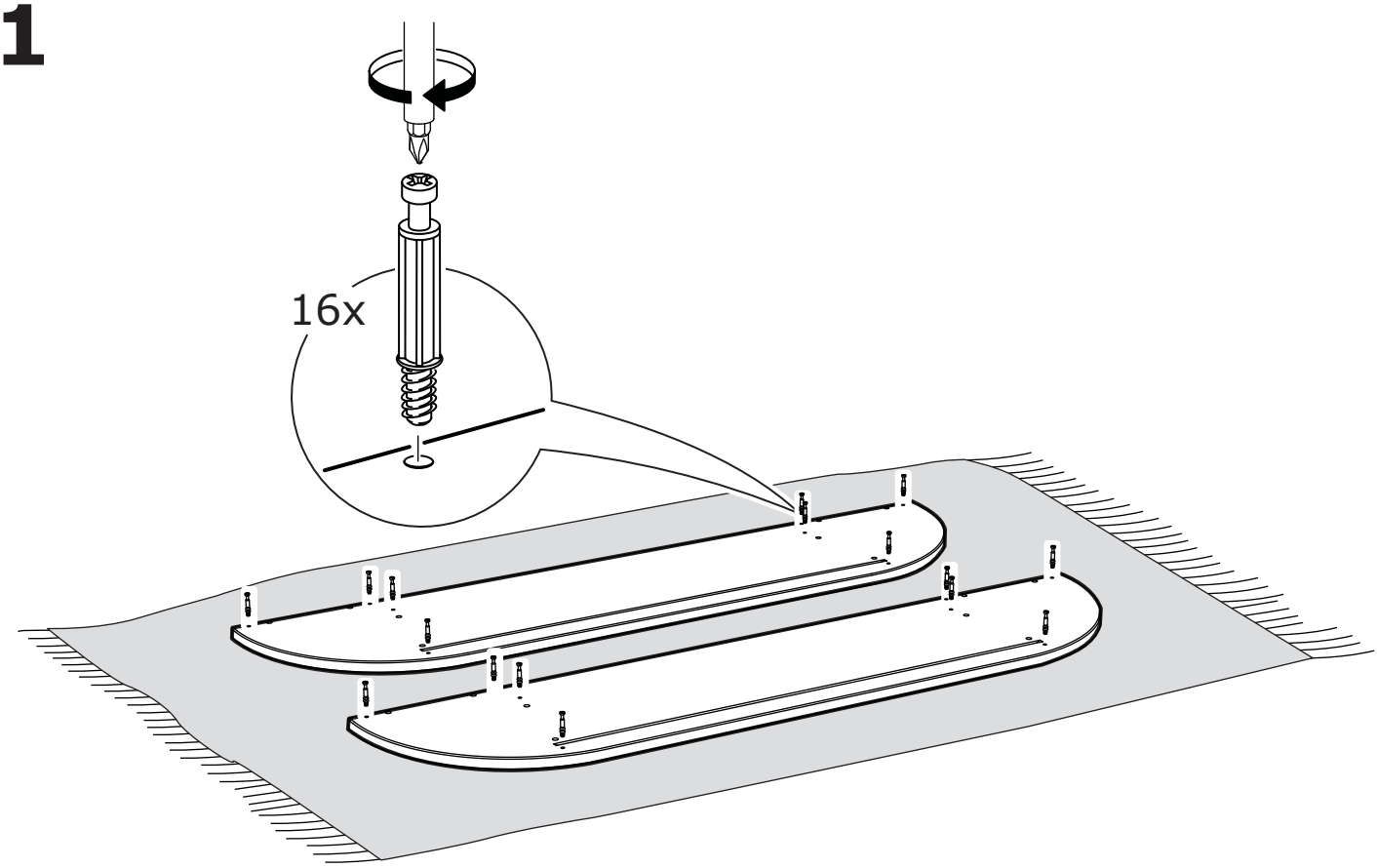

2

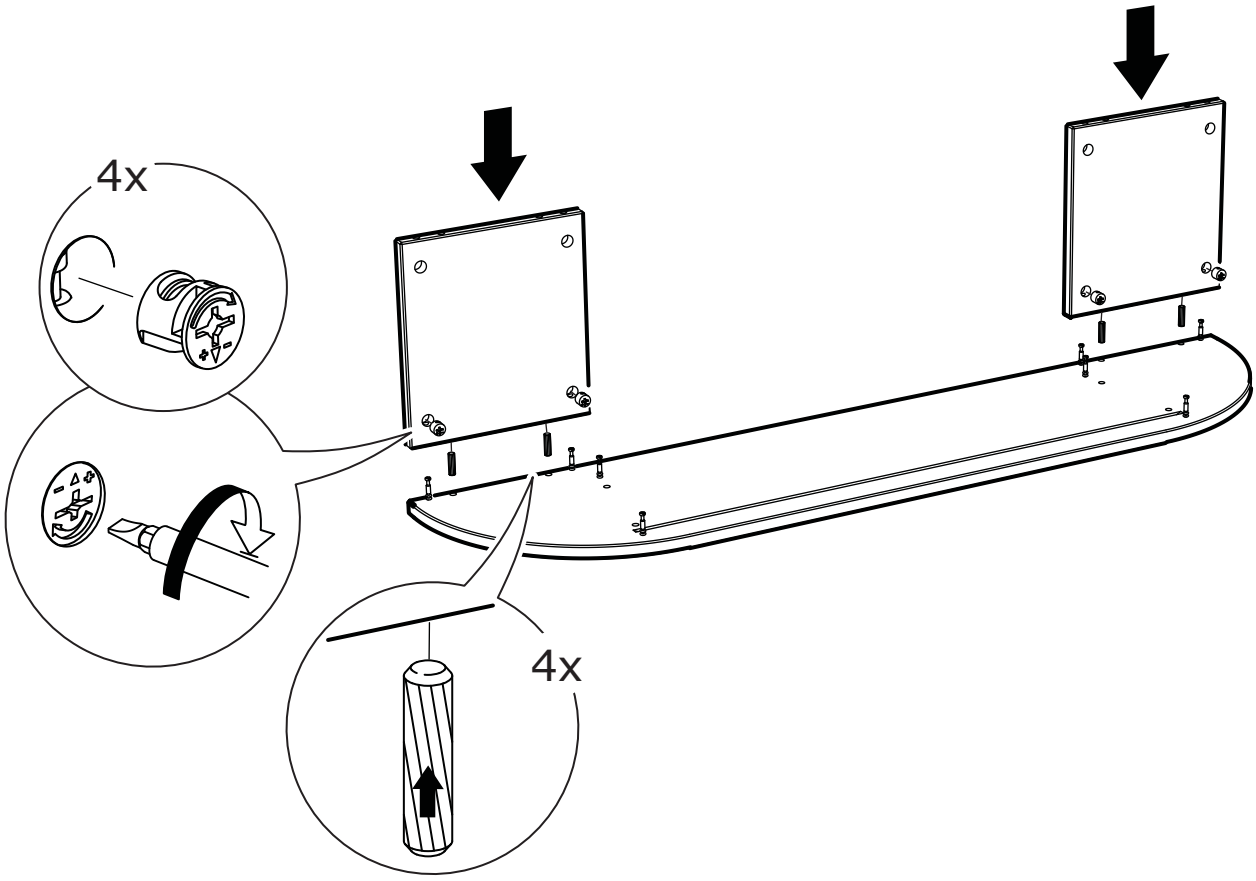

3

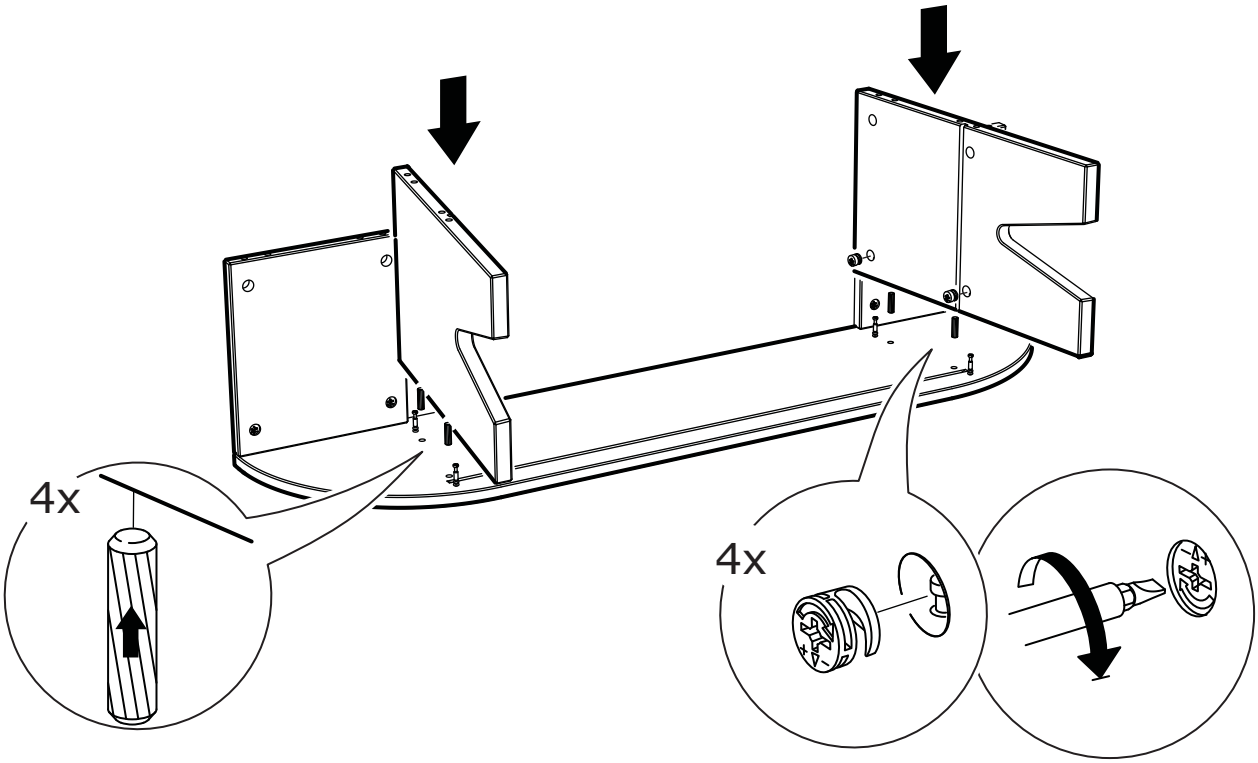

4

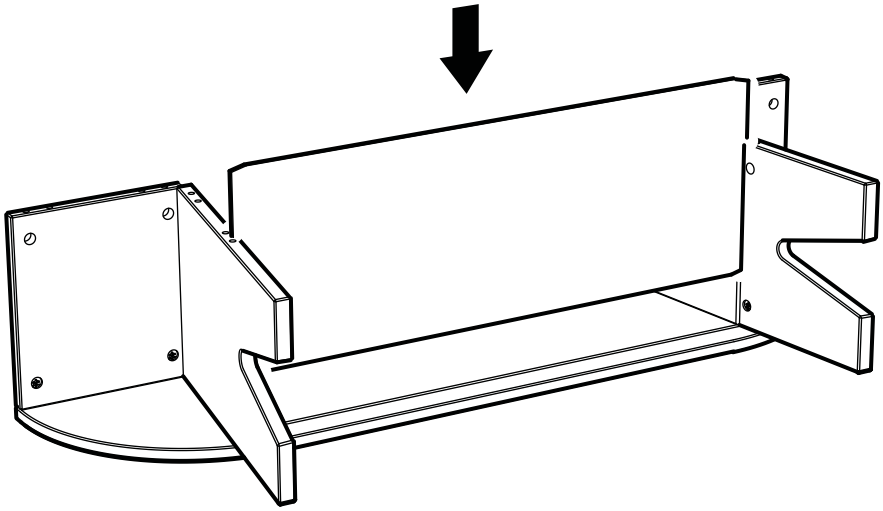

5

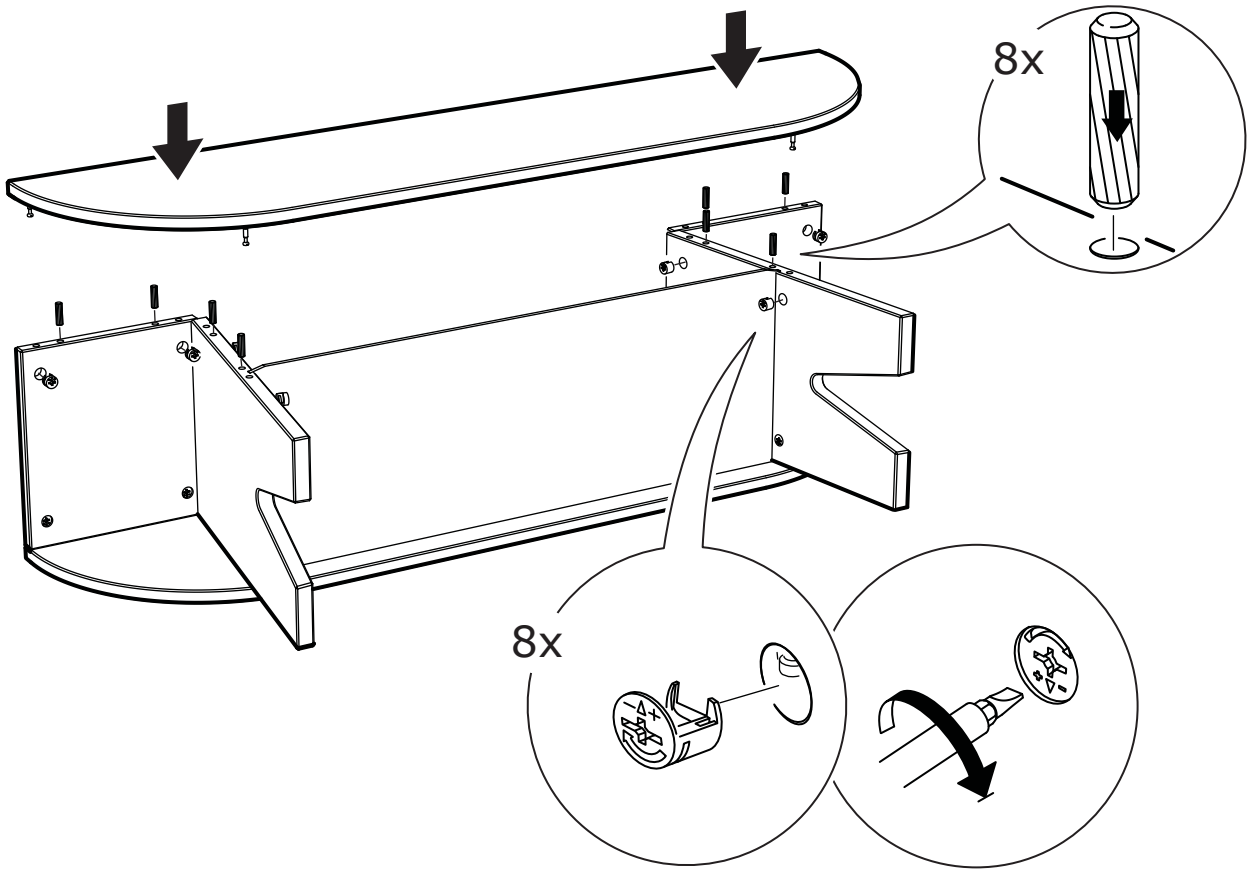

6

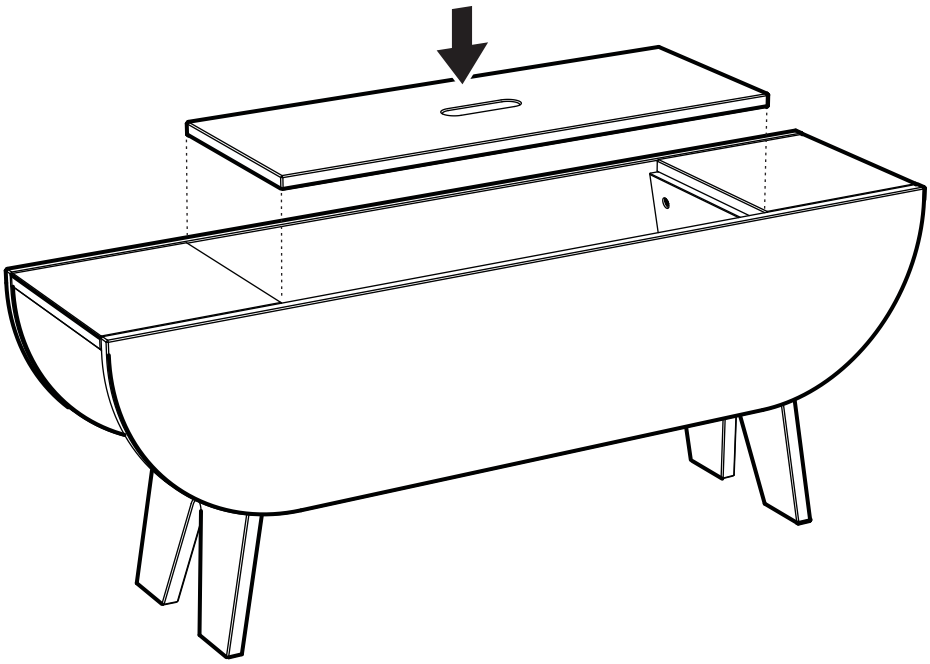

© Inter IKEA Systems B.V. 2011